5 Armature reaction

Earlier, an expression was derived for the induced emf at the terminals of the armature winding under the influence of motion of the conductors under the field established by field poles. But if the generator is to be of some use it should deliver electrical output to a load. In such a case the armature conductors also carry currents and produce a field of their own. The interaction between the fields must therefore must be properly understood in order to understand the behavior of the loaded machine. As the magnetic structure is complex and as we are interested in the flux cut by the conductors, we primarily focus our attention on the surface of the armature. A sign convention is required for mmf as the armature and field mmf are on two different members of the machine. The convention used here is that the mmf acting across the air gap and the flux density in the air gap are shown as positive when they act in a direction from the field system to the armature. A flux line is taken and the value of the current enclosed is determined. As the magnetic circuit is non-linear, the field mmf and armature mmf are separately computed and added at each point on the surface of the armature. The actual flux produced is proportional to the total mmf and the permeance. The flux produced by field and that produced by armature could be added to get the total flux only in the case of a linear magnetic circuit. The mmf distribution due to the poles and armature are discussed now in sequence.

5.0.1 MMF distribution due to the field coils acting alone

Fig. 18 shows the distribution of mmf due to field coils over two pole pitches. It is a step curve with the width being equal to the pole arc. The permeance variation at the surface is given by Fig. 18 assuming the air gap under the pole to be uniform and neglecting

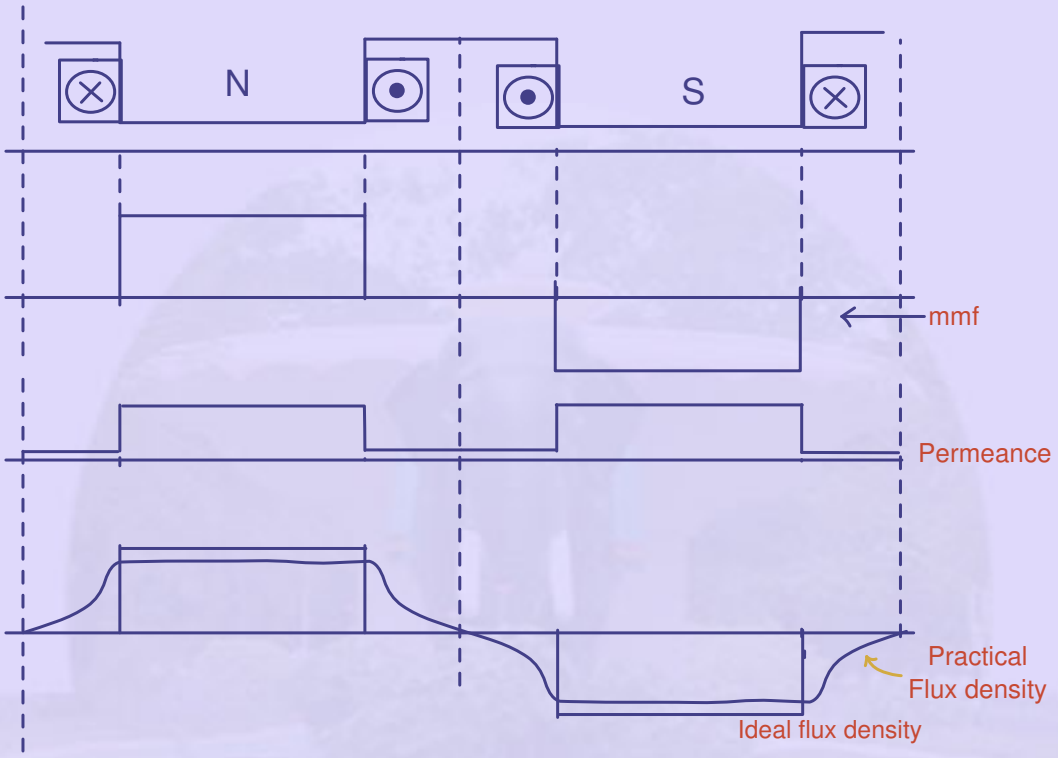

Figure 18: Mmf and flux variation in an unloaded machine

the slotting of the armature. The no-load flux density curve can be obtained by multiplying mmf and permeance. Allowing for the fringing of the flux, the actual flux density curve would be as shown under Fig. 18.

5.0.2 MMF distribution due to armature conductors alone carrying currents

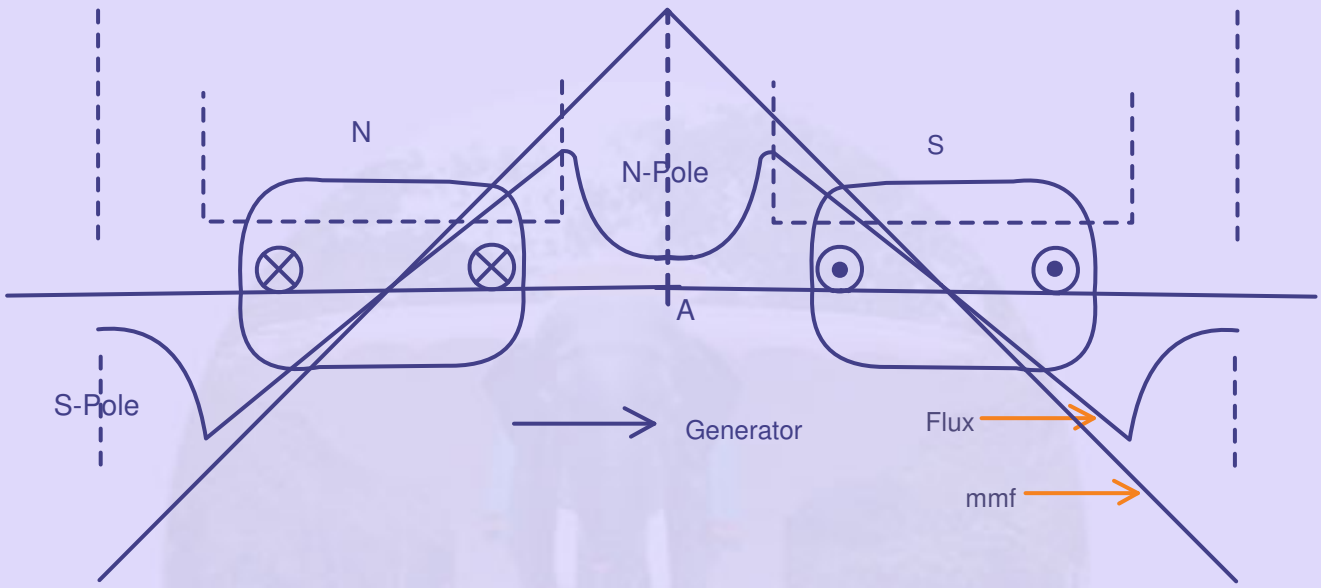

Figure 19: Mmf and flux distribution under the action of armature alone carrying current

The armature has a distributed winding, as against the field coils which are concentrated and concentric. The mmf of each coil is shifted in space by the number of slots. For a full pitched coil, each coil produces a rectangular mmf distribution. The sum of the mmf due to all coils would result in a stepped triangular wave form. If we neglect slotting and have uniformly spaced coils on the surface, then the mmf distribution due to the armature working alone would be a triangular distribution in space since all the conductors carry equal currents. MMF distribution is the integral of the ampere conductor distribution.

This is depicted in Fig. 19. This armature mmf per pole is given by

$$F_a = \frac{1}{2}.\frac{I_c.Z}{2p}$$

where I_c is the conductor current and Z is total number of conductors on the armature. This peak value of the mmf occurs at the inter polar area, shifted from the main pole axis by half the pole pitch when the brushes are kept in the magnetic neutral axis of the main poles.

5.0.3 Total mmf and flux of a loaded machine

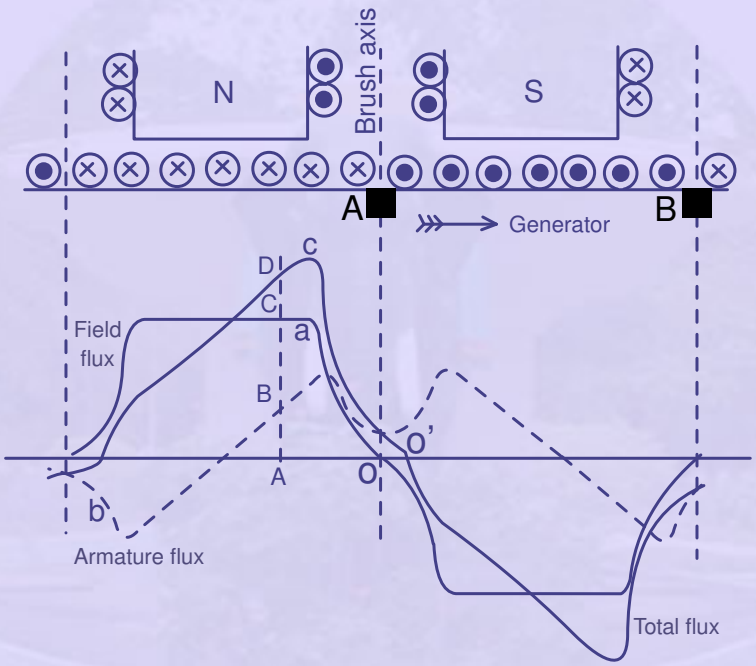

Figure 20: Flux distribution in a loaded generator without brush shift

The mmf of field coils and armature coils are added up and the resultant mmf distribution is obtained as shown in Fig. 20.

This shows the decrease in the mmf at one tip of a pole and a substantial rise at the other tip. If the machine has a pole arc to pole pitch ratio of 0.7 then 70% of the armature reaction mmf gets added at this tip leading to considerable amount of saturation under full load conditions. The flux distribution also is shown in Fig. 20. This is obtained by multiplying mmf and permeance waves point by point in space. Actual flux distribution differs from this slightly due to fringing. As seen from the figure, the flux in the inter polar region is substantially lower due to the high reluctance of the medium. The air gaps under the pole tips are also increased in practice to reduce excessive saturation of this part. The advantage of the salient pole field construction is thus obvious. It greatly mitigates the effect of the armature reaction. Also, the coils under going commutation have very little emf induced in them and hence better commutation is achieved. Even though the armature reaction produced a cross magnetizing effect, the net flux per pole gets slightly reduced, on load, due to the saturation under one tip of the pole. This is more so in modern d.c. machines where the normal excitation of the field makes the machine work under some level of saturation.

5.0.4 Effect of brush shift

In some small d.c. machines the brushes are shifted from the position of the magnetic neutral axis in order to improve the commutation. This is especially true of machines with unidirectional operation and uni-modal (either as a generator or as a motor) operation. Such a shift in the direction of rotation is termed 'lead' (or forward lead). Shift of brushes in the opposite to the direction of rotation is called 'backward lead'. This lead is expressed in terms of the number of commutator segments or in terms of the electrical angle. A pole pitch corresponds to an electrical angle of 180 degrees. Fig. 21 shows the effect of a forward

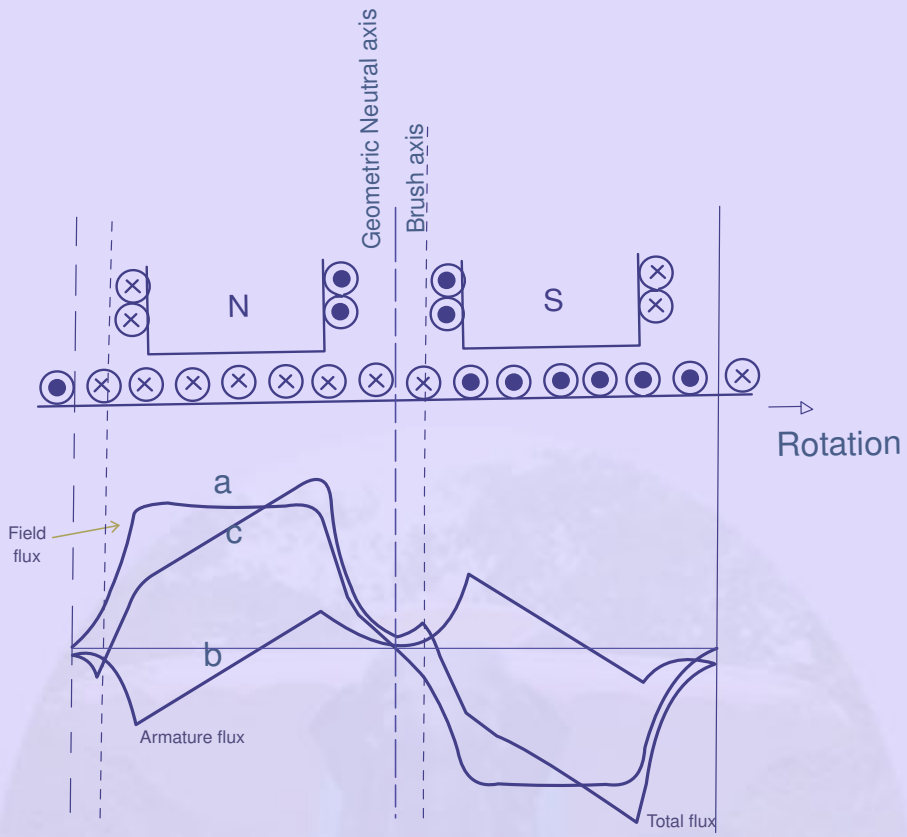

(a)Armature reaction with brush shift

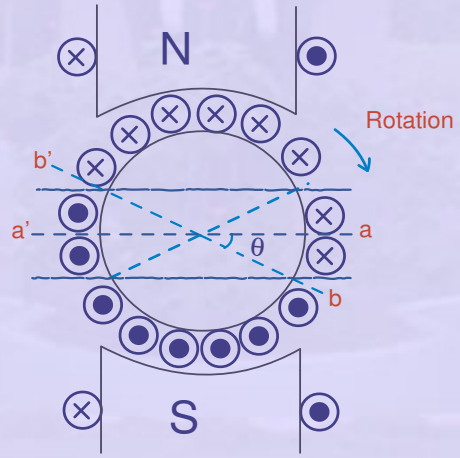

(b)Calculation of demagnetizing mmf per pole

Figure 21: Effect of brush shift on armature reaction

brush lead on the armature reaction. The magnetization action due to the armature is no longer entirely cross magnetizing. Some component of the same goes to demagnetize the main field and the net useful flux gets reduced. This may be seen as the price we pay for improving the commutation. Knowing the pole arc to pole pitch ratio one can determine the total mmf at the leading and trailing edges of a pole without shift in the brushes.

$$F_{min} = F_f - \alpha.F_a \tag{22}$$

$$F_{max} = F_f + \alpha.F_a$$

where F_f is the field mmf, $F_a$is armature reaction mmf per pole, and α is the pole arc to pole pitch ratio.

$$F_a = \frac{1}{2}\frac{Z.I_c}{2p}. \tag{23}$$

The net flux per pole decreases due to saturation at the trailing edge and hence additional ampere turns are needed on the pole to compensate this effect. This may be to the tune of 20 percent in the modern d.c. machines.

The brush shift gives rise to a shift in the axis of the mmf of the armature reaction. This can be resolved into two components, one in the quadrature axis and second along the pole axis as shown in Fig. 21.(b) The demagnetizing and cross magnetizing component of the armature ampere turn per pole can be written as

$$F_d = \frac{2\theta}{\pi}.F_a \tag{24}$$

$$F_q = (1 - \frac{2\theta}{\pi}).F_a \tag{25}$$

where θ is the angle of lead . In terms of the number of commutator segments they are

$$F_d = \frac{C_l}{\frac{C}{4p}}.\frac{I_c Z}{4p} \quad \text{or} \quad \frac{C_l}{C}.I_c.Z \tag{26}$$

where, C_l is the brush lead expressed in number of commutator segments.

5.0.5 Armature reaction in motors

As discussed earlier, for a given polarity of the field and sense of rotation, the motoring and generating modes differ only in the direction of the armature current. Alternatively, for a given sense of armature current, the direction of rotation would be opposite for the two modes. The leading and trailing edges of the poles change positions if direction of rotation is made opposite. Similarly when the brush leads are considered, a forward lead given to a generator gives rise to weakening of the generator field but strengthens the motor field and vice-versa. Hence it is highly desirable, even in the case of non-reversing drives, to keep the brush position at the geometrical neutral axis if the machine goes through both motoring and generating modes.

The second effect of the armature reaction in the case of motors as well as generators is that the induced emf in the coils under the pole tips get increased when a pole tip has higher flux density. This increases the stress on the 'mica' (micanite) insulation used for the commutator, thus resulting in increased chance of breakdown of these insulating sheets. To avoid this effect the flux density distribution under the poles must be prevented from getting distorted and peaky.

The third effect of the armature reaction mmf distorting the flux density is that the armature teeth experience a heavy degree of saturation in this region. This increases the iron losses occurring in the armature in that region. The saturation of the teeth may be too great as to have some flux lines to link the thick end plates used for strengthening

the armature. The increase in iron loss could be as high as 50 percent more at full load compared to its no-load value.

The above two effects can be reduced by providing a 'compensating' mmf at

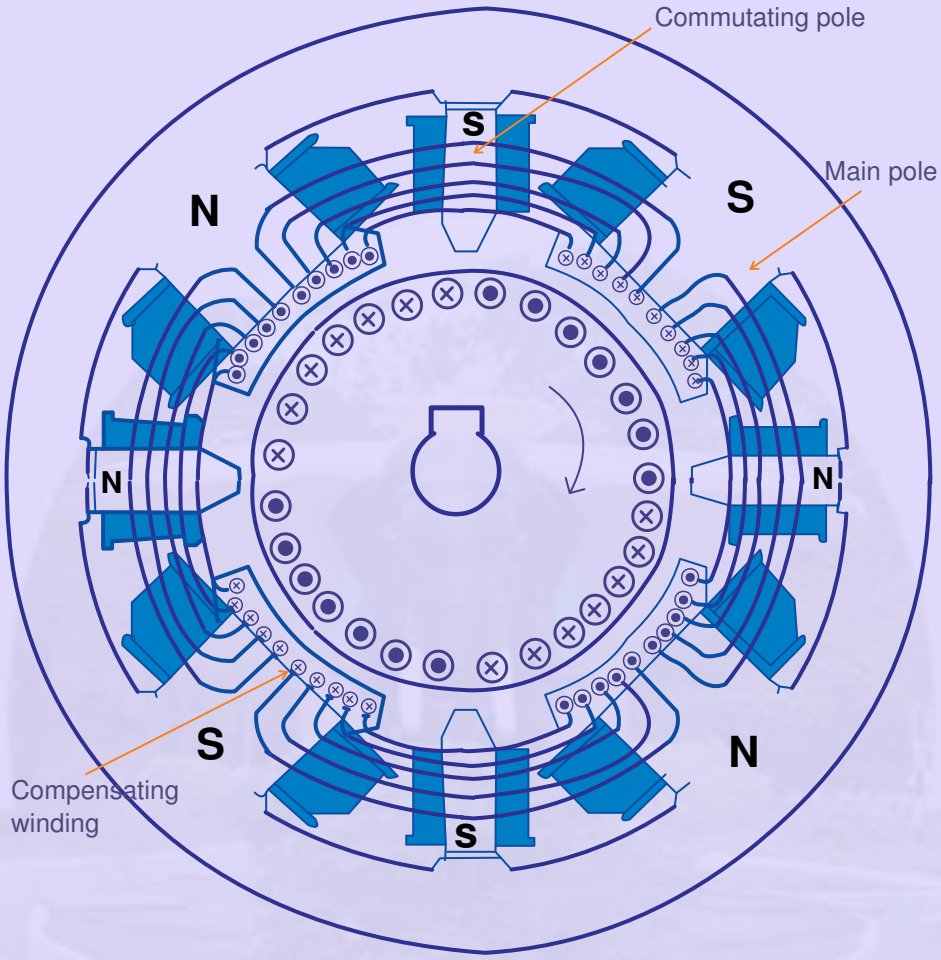

Figure 22: Compensating winding

the *same spatial* rate as the armature mmf. This is provided by having a compensating winding housed on the pole shoe which carries currents that are directly proportional to the armature current. The ampere conductors per unit length is maintained identical to that of

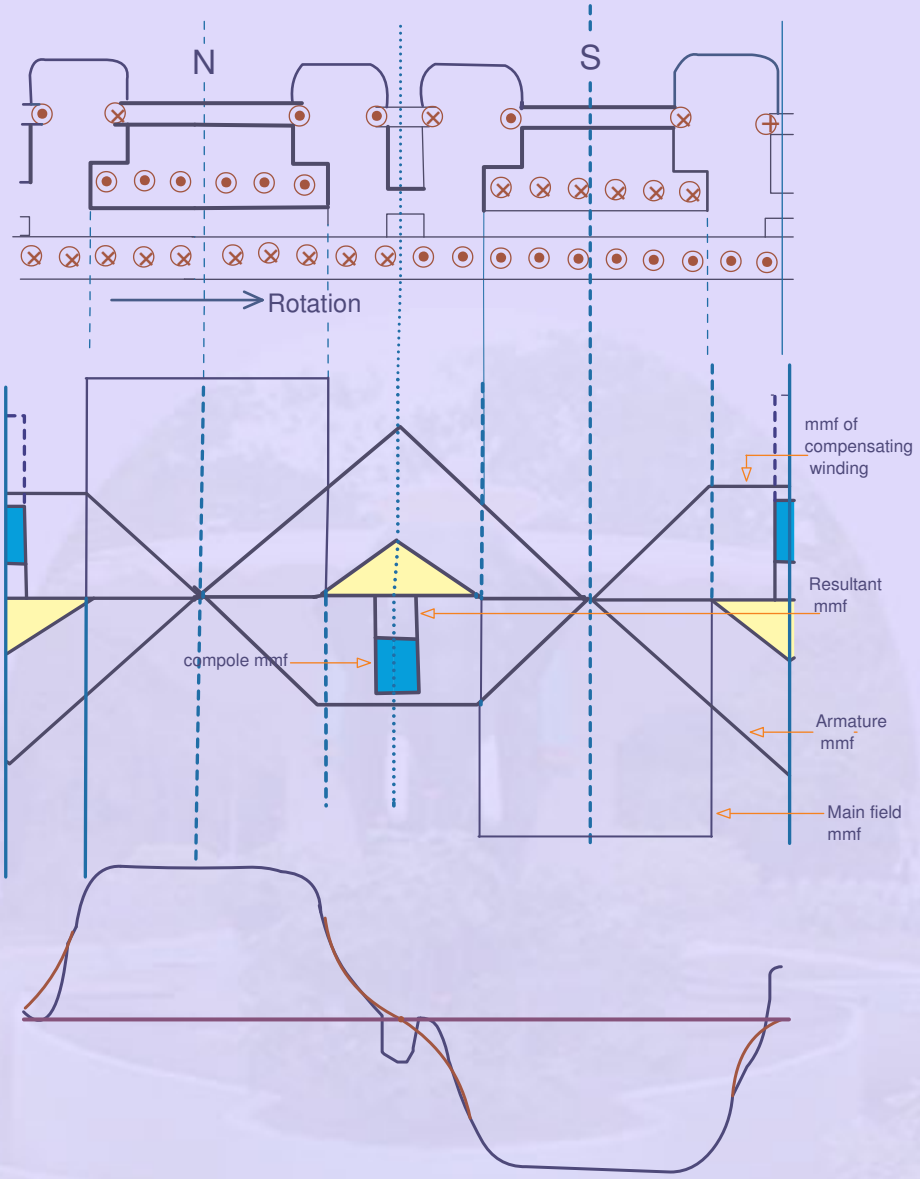

Figure 23: Armature reaction with Compensating winding

the armature. The sign of the ampere conductors is made opposite to the armature. This is illustrated in Fig. 22 and Fig. 23 . Since the compensating winding is connected in series with the armature, the relationship between armature mmf and the mmf due to compensating winding remains proper for all modes of working of the machine. The mmf required to be setup by the compensating winding can be found out to be

$$F_c = \frac{I_c.Z}{4p}.\frac{polearc}{polepitch} \tag{27}$$

Under these circumstances the flux density curve remains unaltered under the poles between no-load and full load.

The axis of the mmf due to armature and the compensating winding being the same and the signs of mmf being opposite to each other the flux density in the region of geometric neutral axis gets reduced thus improving the conditions for commutation. One can design the compensating winding to completely neutralize the armature reaction mmf. Such a design results in overcompensation under the poles. Improvement in commutation condition may be achieved simply by providing a commutating pole which sets up a local field of proper polarity. It is better not to depend on the compensating winding for improving commutation.

Compensating windings are commonly used in large generators and motors operating on weak field working at high loads.

From the analysis of the phenomenon of armature reaction that takes place in a d.c. machine it can be inferred that the equivalent circuit of the machine need not be modified to include the armature reaction. The machine can simply be modelled as a voltage

source of internal resistance equal to the armature circuit resistance and a series voltage drop equal to the brush contact drop, under steady state. With this circuit model one can arrive at the external characteristics of the d.c. machine under different modes of operation.

5.1 Commutation

As seen earlier, in an armature conductor of a heteropolar machine a.c. voltages are induced as the conductor moves under north and south pole polarities alternately. The frequency of this induced emf is given by the product of the pole-pairs and the speed in revolutions per second. The induced emf in a full pitch coil changes sign as the coil crosses magnetic neutral axis. In order to get maximum d.c. voltage in the external circuit the coil should be shifted to the negative group. This process of switching is called commutation. During a short interval when the two adjacent commutator segments get bridged by the brush the coils connected in series between these two segments get short circuited. Thus in the case of ring winding and simple lap winding 2p coils get short circuited. In a simple wave winding in a 2p pole machine 2 coils get short circuited. The current in these coils become zero and get reversed as the brush moves over to the next commutator segment. Thus brush and commutator play an important role in commutation. Commutation is the key process which converts the induced a.c. voltages in the conductors into d.c. It is important to learn about the working of the same in order to ensure a smooth and trouble free operation of the machine.

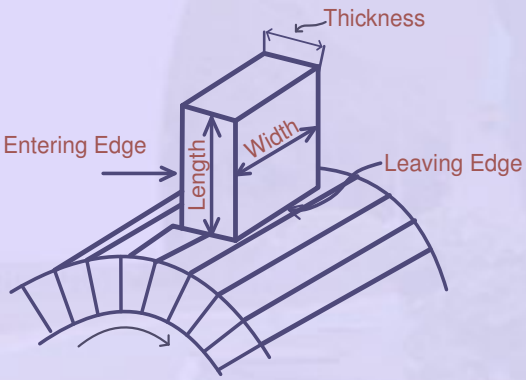

(a)Location of Brush

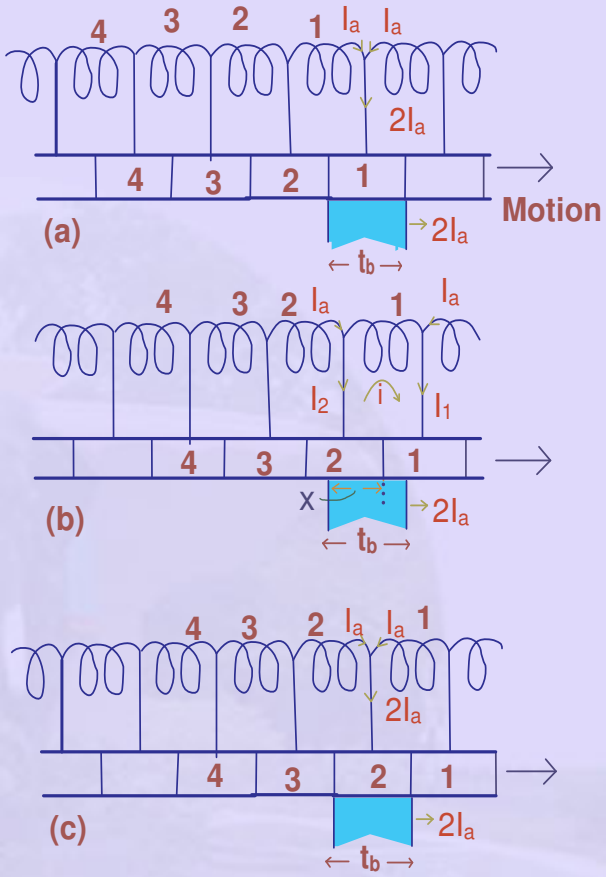

(b)Process of commutation

Figure 24: Location of the brush and Commutation process

5.1.1 Brushes

Brush forms an important component in the process of commutation. The coil resistance is normally very small compared to the brush contact resistance. Further this brush contact resistance is not a constant. With the brushes commonly used, an increase in the current density of the brushes by 100 percent increases the brush drop by about 10 to 15 percent. Brush contact drop is influenced by the major factors like speed of operation, pressure on the brushes, and to a smaller extent the direction of current flow.

Major change in contact resistance is brought about by the composition of the brush. Soft graphite brushes working at a current density of about $10A/cm^2$ produce a drop of 1.6V (at the positive and negative brushes put together) while copper-carbon brush working at $15A/cm^2$ produces a drop of about 0.3V. The coefficient of friction for these brushes are 0.12 and 0.16 respectively. The attention is focussed next on the process of commutation.

5.1.2 Linear Commutation

If the current density under the brush is assumed to be constant through out the commutation interval, a simple model for commutation is obtained. For simplicity, the brush thickness is made equal to thickness of one commutator segment. In Fig. 24(b), the brush is initially solely resting on segment number 1. The total current of $2I_a$ is collected by the brush as shown. As the commutator moves relative to the brush position, the brush position starts to overlap with that of segment 2. As the current density is assumed to be constant, the current from each side of the winding is proportional to the area shared on the

two segments. Segment 1 current uniformly comes down with segment 2 current increasing uniformly keeping the total current in the brush constant. The currents I_1 and I_2 in brush segments 1 and 2 are given by

$$I_1 = 2I_a(1 - \frac{x}{t_b}) \quad \text{and} \qquad I_2 = 2I_a\frac{x}{t_b} \tag{28}$$

giving $I_1 + I_2$ to be 2 I_a.

Here 'x' is the width of the brush overlapping on segment 2. The process of commutation would be over when the current through segment number 1 becomes zero. The current in the coil undergoing commutation is

$$i = I_1 - I_a = I_a - I_2 = \frac{(I_1 - I_2)}{2} = I_a(1 - \frac{2x}{t_b}) \tag{29}$$

The time required to complete this commutation is

$$T_c = \frac{t_b}{v_c} \tag{30}$$

where v_c is the velocity of the commutator. This type of linear commutation is very close to the ideal method of commutation. The time variation of current in the coil undergoing commutation is shown in Fig. 25.(a). Fig. 25.(b) also shows the timing diagram for the currents I_1 and I_2 and the current densities in entering edge α_e, leaving edge α_l and also the mean current density α_m in the brush. Machines having very low coil inductances, operating at low load currents, and low speeds, come close to this method of linear commutation.

In general commutation will not be linear due to the presence of emf of self induction and induced rotational emf in the coil. These result in retarded and accelerated commutation and are discussed in sequence.

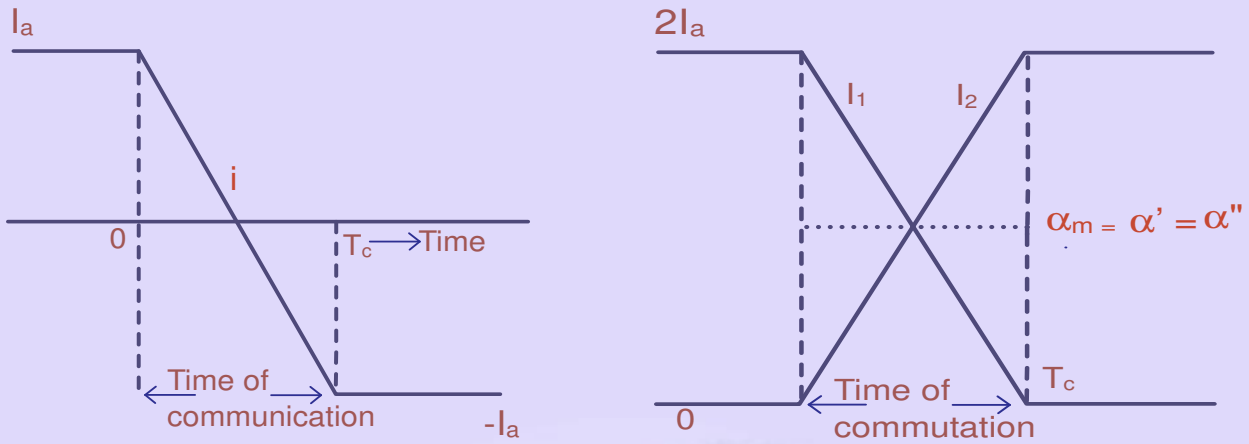

(a) (b)

Figure 25: Linear commutation

5.1.3 Retarded commutation

Retarded commutation is mainly due to emf of self induction in the coil. Here the current transfer from 1 to 2 gets retarded as the name suggests. This is best explained with the help of time diagrams as shown in Fig. 26.(a). The variation of i is the change in the current of the coil undergoing commutation, while $i^{'}$ is that during linear commutation. Fig. 26(b) shows the variation of I_1 and current density in the brush at the leaving edge and Fig. 26.(c) shows the same phenomenon with respect to I_2 at entering edge. The value of current in the coil is given by i undergoing commutation. α_m is the mean current density in the brush given by total current divided by brush area of cross section. α_l and α_e are the current density under leaving and entering edges of the brush. As before,

$$I_1 = I_a + i \qquad \text{and} \qquad I_2 = I_a - i \tag{31}$$

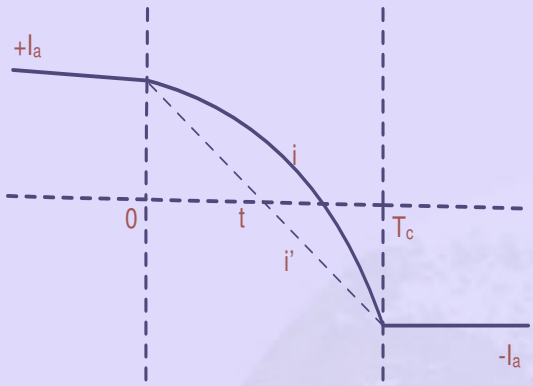

(a) commutation

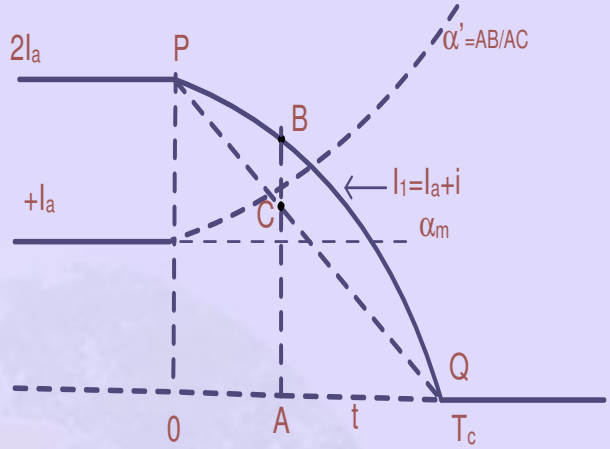

(b) Leaving edge density

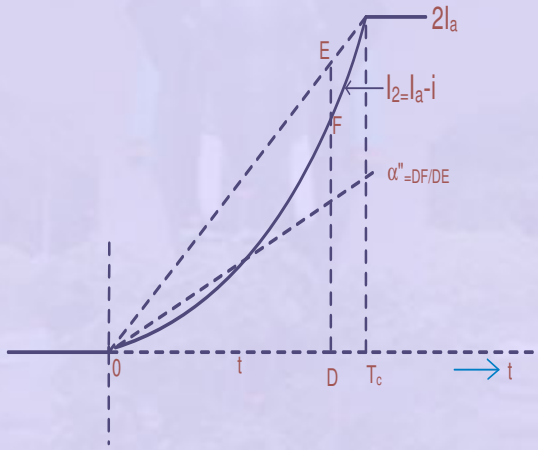

(c)Entry edge density

Figure 26: Diagrams for Retarded commutation

The variation of densities at leaving and entering edges are given as

$$\alpha_l = \frac{AB}{AC}.\alpha_m \tag{32}$$

$$\alpha_e = \frac{DF}{DE}.\alpha_m \tag{33}$$

At the very end of commutation, the current density

$$\begin{aligned} \alpha_e &= \alpha_m.\frac{di}{dt}/\frac{di'}{dt} \\ &= \alpha_m.\frac{di}{dt}/\frac{2I_a}{T_c} \end{aligned} \tag{34}$$

If at this point $di/dt = 0$ the possibility of sudden breaking of the current and hence the creation of an arc is removed .

Similarly at the entering edge at the end of accelerated commutation, shown in Fig. 27.(b).

$$\alpha_e = \alpha_m.\frac{di}{dt}/\frac{2I_a}{T_c} \tag{35}$$

Thus retarded communication results in $di/dt = 0$ at the beginning of commutation (at entering edge) and accelerated communication results in the same at the end of commutation (at leaving edge). Hence it is very advantageous to have retarded commutation at the entry time and accelerated commutation in the second half. This is depicted in Fig. 27.(b_1). It is termed as sinusoidal commutation.

Retarded commutation at entry edge is ensured by the emf of self induction which is always present. To obtain an accelerated commutation, the coil undergoing commutation must have in it an induced emf of such a polarity as that under the pole towards which it is moving. Therefore the accelerated commutation can be obtained by i) a forward

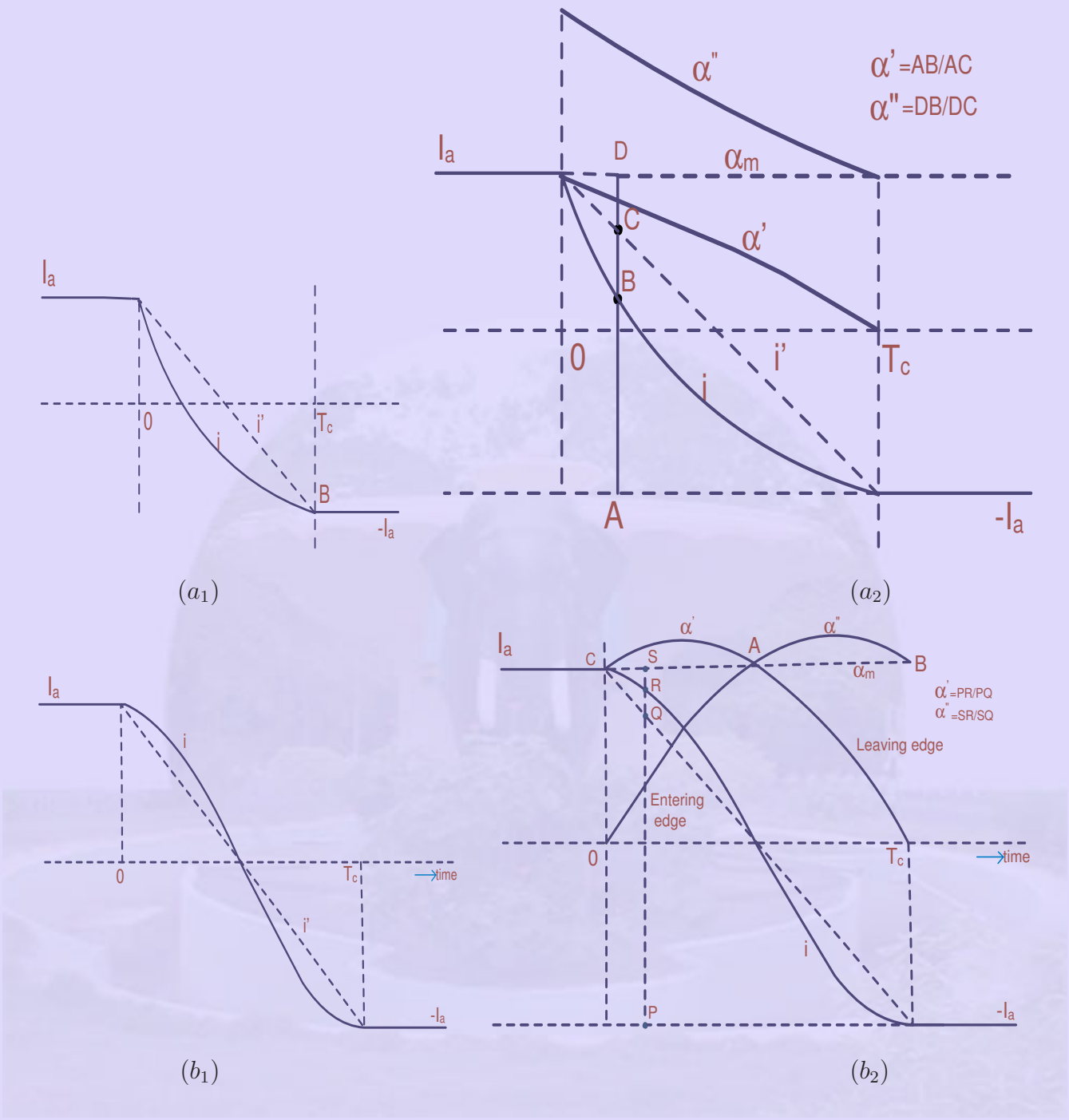

Figure 27: Accelerated and Sinusoidal commutation

lead given to the brushes or by ii) having the field of suitable polarity at the position of the brush with the help of a small pole called a commutating pole. In a non-inter pole machine the brush shift must be changed from forward lead to backward lead depending upon generating or motoring operation. As the disadvantages of this brush shifts are to be avoided, it is preferable to leave the brushes at geometric neutral axis and provide commutating poles of suitable polarity (for a generator the polarity of the pole is the one towards which the conductors are moving). The condition of commutation will be worse if commutating poles are provided and not excited or they are excited but wrongly.

The action of the commutating pole is local to the coil undergoing commutation. It does not disturb the main field distribution. The commutating pole winding overpowers the armature mmf locally and establishes the flux of suitable polarity. The commutating pole windings are connected in series with the armature of a d.c. machine to get a load dependent compensation of armature reaction mmf.

The commutating pole are also known as compole or inter pole. The air gap under compole is made large and the width of compole small. The mmf required to be produced by compole is obtained by adding to the armature reaction mmf per pole F_a the mmf to establish a flux density of required polarity in the air gap under the compole F_{cp} .This would ensure straight line commutation. If sinusoidal commutation is required then the second component F_{cp} is increased by 30 to 50 percent of the value required for straight line commutation.

The compole mmf in the presence of a compensating winding on the poles

will be reduced by Fa * pole arc/pole pitch. This could have been predicted as the axis of the compensating winding and armature winding is one and the same. Further, the mmf of compensating winding opposes that of the armature reaction.

5.2 Methods of excitation

It is seen already that the equivalent circuit model of a d.c. machine becomes very simple in view of the fact that the armature reaction is cross magnetizing. Also, the axis of compensating mmf and mmf of commutating poles act in quadrature to the main field. Thus flux under the pole shoe gets distorted but not diminished (in case the field is not saturated). The relative connections of armature, compole and compensating winding are unaltered whether the machine is working as a generator or as a motor; whether the load is on the machine or not. Hence all these are connected permanently inside the machine. The terminals reflect only the additional ohmic drops due to the compole and compensating windings. Thus commutating pole winding, and compensating winding add to the resistance of the armature circuit and can be considered a part of the same. The armature circuit can be simply modelled by a voltage source of internal resistance equal to the armature resistance + compole resistance + compensating winding resistance. The brushes behave like non-linear resistance; and their effect may be shown separately as an additional constant voltage drop equal to the brush drop.

5.2.1 Excitation circuit

The excitation for establishing the required field can be of two types a) Permanent magnet excitation(PM) b) Electro magnetic excitation. Permanent magnet excitation is

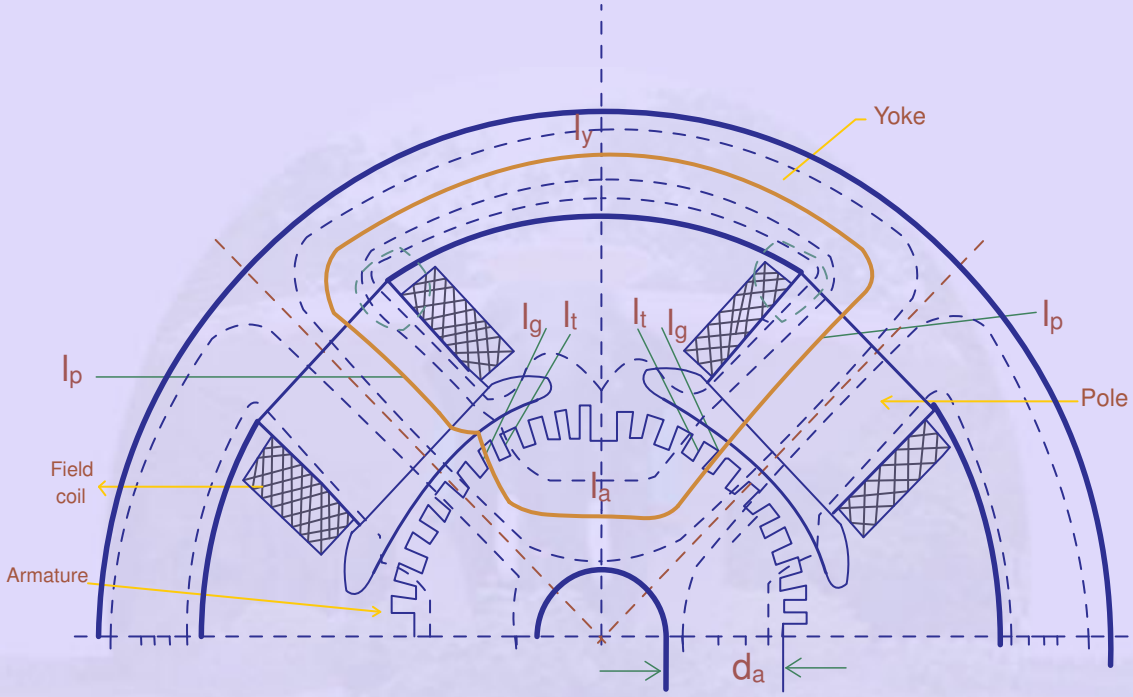

Figure 28: Magnetization of a DC machine

employed only in extremely small machines where providing a field coil becomes infeasible. Also, permanent magnet excited fields cannot be varied for control purposes. Permanent magnets for large machines are either not available or expensive. However, an advantage of permanent magnet is that there are no losses associated with the establishment of the field.

Electromagnetic excitation is universally used. Even though certain amount of energy is lost in establishing the field it has the advantages like lesser cost, ease of control.

The required ampere turns for establishing the desired flux per pole may be computed by doing the magnetic circuit calculations. MMF required for the poles, air gap, armature teeth, armature core and stator yoke are computed and added. Fig. 28 shows two poles of a 4-pole machine with the flux paths marked on it. Considering one complete flux loop, the permeance of the different segments can be computed as,

$$P = A.\mu/l$$

Where P- permeance

A- Area of cross section of the part

mu- permeability of the medium

l- Length of the part

A flux loop traverses a stator yoke, armature yoke, and two numbers each of poles, air gap, armature teeth in its path. For an assumed flux density B_g in the pole region the flux crossing each of the above regions is calculated. The mmf requirement for

establishing this flux in that region is computed by the expressions

$$\text{Flux} = \text{mmf . permeance}$$
$$= B.A$$

From these expressions the mmf required for each and every part in the path of the flux is computed and added. This value of mmf is required to establish two poles. It is convenient to think of mmf per pole which is nothing but the ampere turns required to be produced by a coil wound around one pole. In the case of small machines all this mmf is produced by a coil wound around one pole. The second pole is obtained by induction. This procedure saves cost as only one coil need be wound for getting a pair of poles. This produces an unsymmetrical flux distribution in the machine and hence is not used in larger machines. In large machines, half of total mmf is assigned to each pole as the mmf per pole. The total mmf required can be produced by a coil having large number of turns but taking a small current. Such winding has a high value of resistance and hence a large ohmic drop. It can be connected across a voltage source and hence called a shunt winding. Such method of excitation is termed as shunt excitation. On the other hand, one could have a few turns of large cross section wire carrying heavy current to produce the required ampere turns. These windings have extremely small resistance and can be connected in series with a large current path such as an armature. Such a winding is called a series winding and the method of excitation, series excitation. A d.c. machine can have either of these or both these types of excitation.

These are shown in Fig. 29. When both shunt winding and series winding are present, it is called compound excitation. The mmf of the two windings could be arranged to aid each other or oppose each other. Accordingly they are called cumulative compounding and differential compounding. If the shunt winding is excited by a separate voltage source

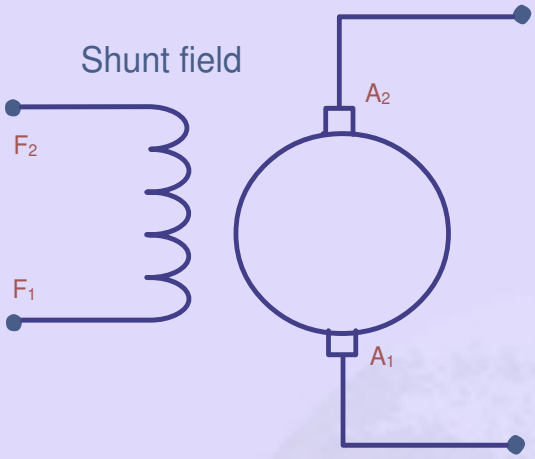

(a)Separate excitation

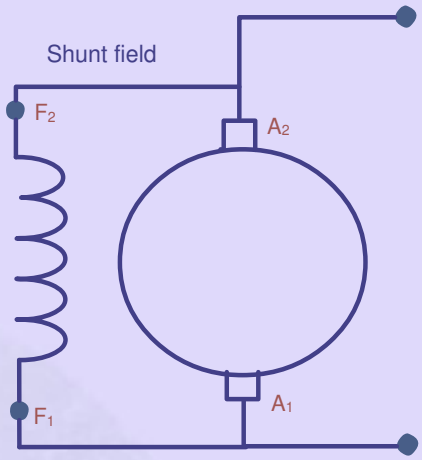

(b) Self excitation

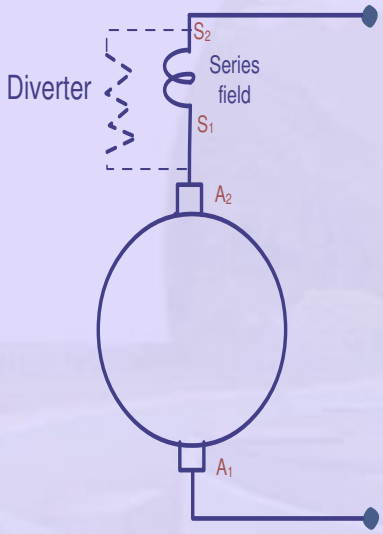

(c)Series excitation

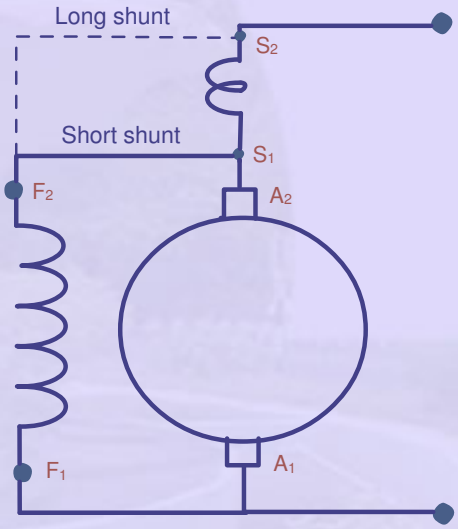

(d)Compound excitation

Figure 29: D.C generator connections

then it is called separate excitation. If the excitation power comes from the same machine, then it is called self excitation. Series generators can also be separately excited or self excited. The characteristics of these generators are discussed now in sequence.

5.2.2 Separately excited shunt generators

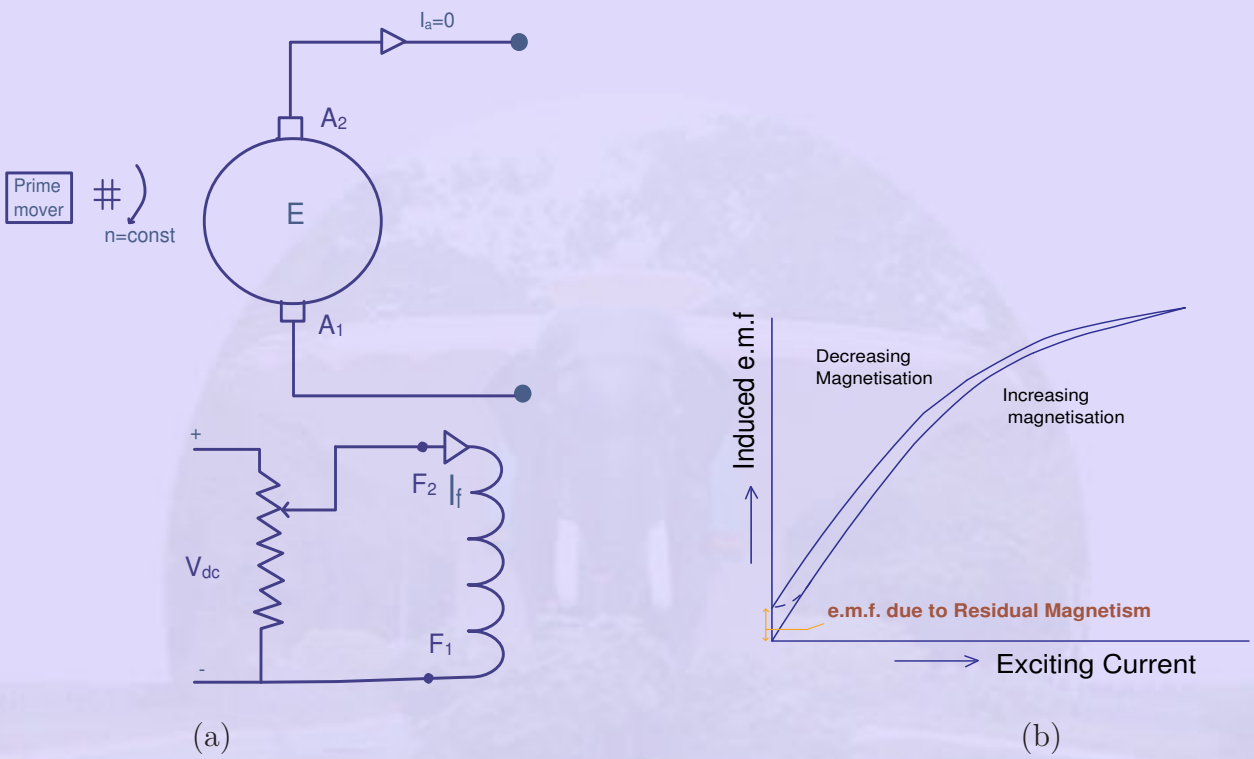

Figure 30: Magnetization characteristics

Fig. 30 shows a shunt generator with its field connected to a voltage source V_f through a regulating resistor in potential divider form. The current drawn by the field winding can be regulated from zero to the maximum value. If the change in the excitation required is small, simple series connection of a field regulating resistance can be used. In all these cases the presence of a prime mover rotating the armature is assumed. A

separate excitation is normally used for testing of d.c. generators to determine their open circuit or magnetization characteristic. The excitation current is increased monotonically to a maximum value and then decreased in the same manner, while noting the terminal voltage of the armature. The load current is kept zero. The speed of the generator is held at a constant value. The graph showing the nature of variation of the induced emf as a function of the excitation current is called as open circuit characteristic (occ), or no-load magnetization curve or no-load saturation characteristic. Fig. 30(b). shows an example. The magnetization characteristic exhibits saturation at large values of excitation current. Due to the hysteresis exhibited by the iron in the magnetic structure, the induced emf does not become zero when the excitation current is reduced to zero. This is because of the remnant field in the iron. This residual voltage is about 2 to 5 percent in modern machines. Separate excitation is advantageous as the exciting current is independent of the terminal voltage and load current and satisfactory operation is possible over the entire voltage range of the machine starting from zero.

5.2.3 Self excitation

In a self excited machine, there is no external source for providing excitation current. The shunt field is connected across the armature. For series machines there is no change in connection. The series field continues to be in series with the armature.

Self excitation is now discussed with the help of Fig. 31.(a) The process of self excitation in a shunt generator takes place in the following manner. When the armature is rotated a feeble induced emf of 2 to 5 percent appears across the brushes depending upon the speed of rotation and the residual magnetism that is present. This voltage

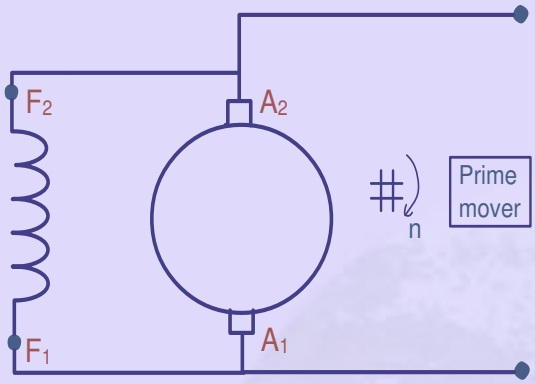

(a)Physical connection

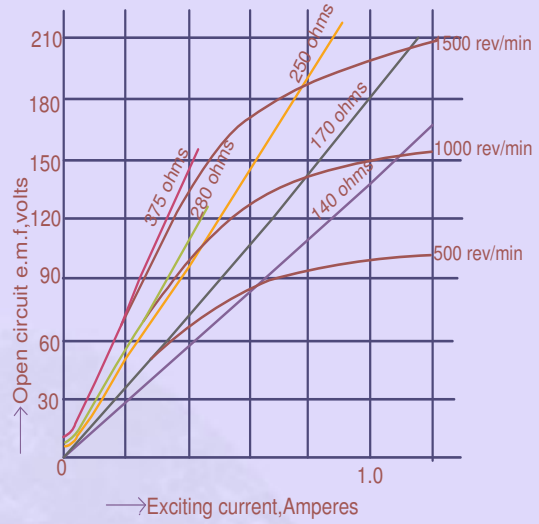

(b) characteristics

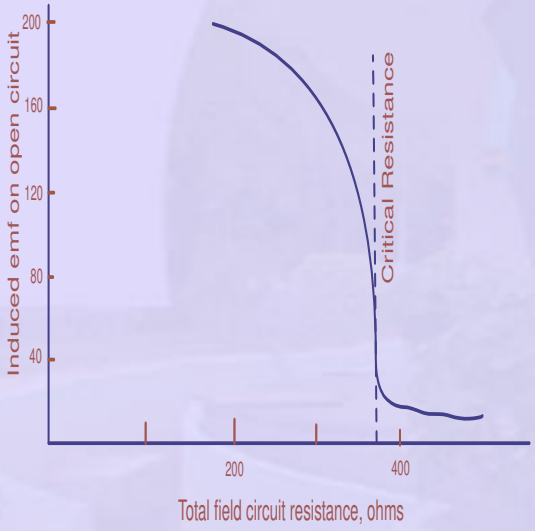

(c)Critical resistance

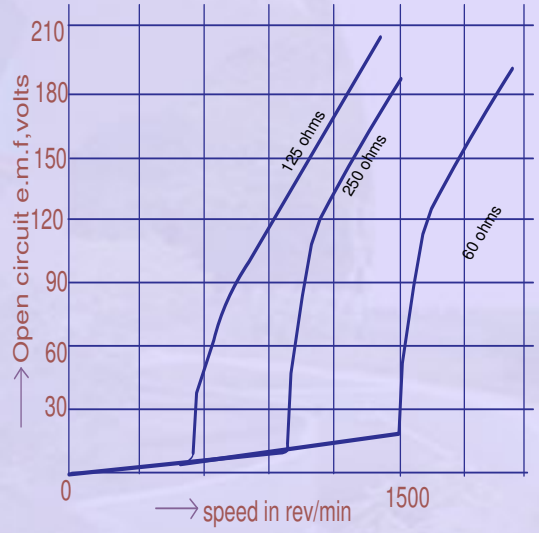

(d) Critical speed

Figure 31: Self excitation

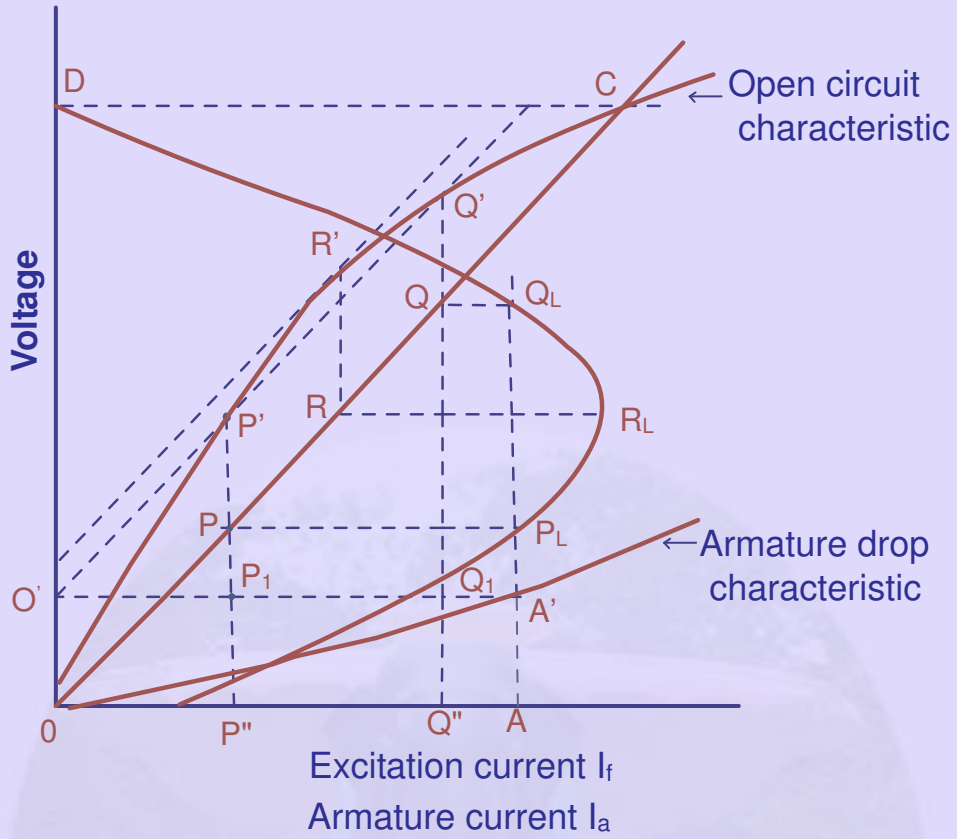

Figure 32: External characteristics of a self excited of a shunt generator

gets applied across the shunt field winding and produces a small mmf. If this mmf is such as to aid the residual field then it gets strengthened and produces larger voltage across the brushes. It is like a positive feed back. The induced emf gradually increases till the voltage induced in the armature is just enough to meet the ohmic drop inside the field circuit. Under such situation there is no further increase in the field mmf and the build up of emf also stops. If the voltage build up is 'substantial', then the machine is said to have 'self excited'.

Fig. 31(b) shows the magnetization curve of a shunt generator. The field resistance line is also shown by a straight line OC. The point of intersection of the open circuit charac-

teristic (OCC) with the field resistance line, in this case C, represents the voltage build up on self excitation. If the field resistance is increased, at one point the resistance line becomes a tangent to the OCC. This value of the resistance is called the critical resistance. At this value of the field circuit resistance the self excitation suddenly collapses. See Fig. 31(c). Instead of increasing the field resistance if the speed of the machine is reduced then the same resistance line becomes a critical resistance at a new speed and the self excitation collapses at that speed. In this case, as the speed is taken as the variable, the speed is called the critical speed. In the linear portion of the OCC the ordinates are proportional to the speed of operation, hence the critical resistance increases as a function of speed Fig. 31.(b) and (d).

The conditions for self excitation can be listed as below.

1. Residual field must be present.
2. The polarity of excitation must aid the residual magnetism.
3. The field circuit resistance must be below the critical value.
4. The speed of operation of the machine must be above the critical speed.
5. The load resistance must be very large.

Remedial measures to be taken if the machine fails to self excite are briefly discussed below.

1. The residual field will be absent in a brand new, unexcited, machine. The field may be connected to a battery in such cases for a few seconds to create a residual field.

2. The polarity of connections have to be set right. The polarity may become wrong either by reversed connections or reversed direction of rotation. If the generator had been working with armature rotating in clockwise direction before stopping and if one tries to self excite the same with counter clockwise direction then the induced emf opposes residual field, changing the polarity of connections of the field with respect to armature is normally sufficient for this problem.

3. Field circuit resistance implies all the resistances coming in series with the field winding like regulating resistance, contact resistance, drop at the brushes, and the armature resistance. Brush contact resistance is normally high at small currents. The dirt on the commutator due to dust or worn out mica insulator can increase the total circuit resistance enormously. The speed itself might be too low so that the normal field resistance itself is very much more than the critical value. So ensuring good speed, clean commutator and good connections should normally be sufficient to overcome this problem.

4. Speed must be increased sufficiently to a high value to be above the critical speed.

5. The load switch must be opened or the load resistance is made very high.

5.2.4 Self excitation of series generators

The conditions for self excitation of a series generator remain similar to that of a shunt machine. In this case the field circuit resistance is the same as the load circuit resistance and hence it must be made very low to help self excitation. To control the field mmf a small resistance called diverter is normally connected across the series field. To help in the creation of maximum mmf during self excitation any field diverter if present must be

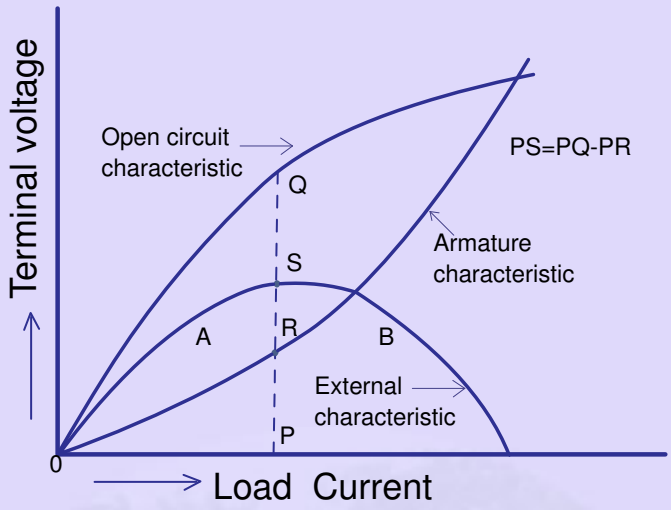

Figure 33: External characteristics of a Series Generator

open circuited.In a series generator load current being the field current of the machine the self excitation characteristic or one and the same. This is shown in Fig. 33

5.2.5 Self excitation of compound generators

Most of the compound machines are basically shunt machines with the series winding doing the act of strengthening/weakening the field on load, depending up on the connections. In cumulatively compounded machines the mmf of the two fields aid each other and in a differentially compounded machine they oppose each other. Due to the presence of the shunt winding, the self excitation can proceed as in a shunt machine. A small difference exists however depending up on the way the shunt winding is connected to the armature. It can be a short shunt connection or a long shunt connection. In long shunt connection the shunt field current passes through the series winding also. But it does not affect the process of self excitation as the mmf contribution from the series field is negligible.

Both series field winding and shunt field winding are wound around the main poles. If there is any need, for some control purposes, to have more excitation windings of one type or the other they will also find their place on the main poles. The designed field windings must cater to the full range of operation of the machine at nominal armature current. As the armature current is cross magnetizing the demagnetization mmf due to pole tip saturation alone need be compensated by producing additional mmf by the field.

The d.c. machines give rise to a variety of external characteristics with considerable ease. The external characteristics are of great importance in meeting the requirements of different types of loads and in parallel operation. The external characteristics, also known as load characteristics, of these machines are discussed next.

5.3 Load characteristics of d.c. generators

Load characteristics are also known as the external characteristics. External characteristics expresses the manner in which the output voltage of the generator varies as a function of the load current, when the speed and excitation current are held constant. If they are not held constant then there is further change in the terminal voltage. The terminal voltage V can be expressed in terms of the induced voltage E and armature circuit drop as

$$V = E - I_a R_a - V_b \tag{36}$$

V_b - brush contact drop, V

I_a - armature current, A

R_a - armature resistance + inter pole winding resistance+ series winding resistance + com-

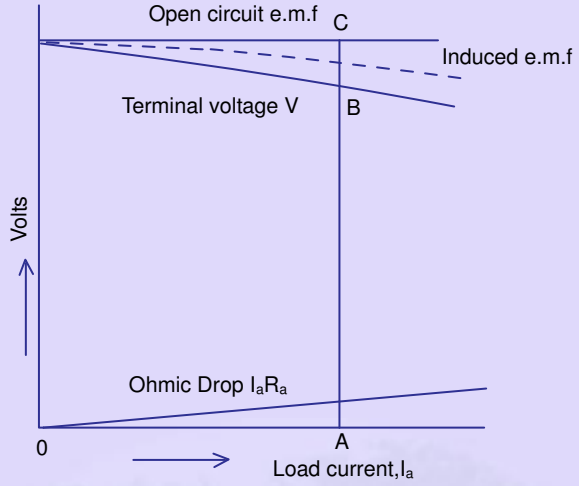

Figure 34: External characteristics of a separately excited shunt generator

pensating winding resistance.

As seen from the equation E being function of speed and flux per pole it will also change when these are not held constant. Experimentally the external characteristics can be determined by conducting a load test. If the external characteristic is obtained by subtracting the armature drop from the no-load terminal voltage, it is found to depart from the one obtained from the load test. This departure is due to the armature reaction which causes a saturation at one tip of each pole. Modern machines are operated under certain degree of saturation of the magnetic path. Hence the reduction in the flux per pole with load is obvious. The armature drop is an electrical drop and can be found out even when the machine is stationary and the field poles are unexcited. Thus there is some slight droop in the external characteristics, which is good for parallel operation of the generators.

One could easily guess that the self excited machines have slightly higher droop in the external characteristic as the induced emf E drops also due to the reduction in the applied voltage to the field. If output voltage has to be held constant then the excitation current or the speed can be increased. The former is preferred due to the ease with which it can be implemented. As seen earlier, a brush lead gives rise to a load current dependent mmf along the pole axis. The value of this mmf magnetizes/demagnetizes the field depending on whether the lead is backward or forward.

5.4 External characteristics of a shunt generator

For a given no-load voltage a self excited machine will have more voltage drop at the terminals than a separately excited machine, as the load is increased. This is due to the dependence of the excitation current also on the terminal voltage. After certain load current the terminal voltage decreases rapidly along with the terminal current, even when load impedance is reduced. The terminal voltage reaches an unstable condition. Also, in a self excited generator the no-load terminal voltage itself is very sensitive to the point of intersection of the magnetizing characteristics and field resistance line. The determination of the external characteristics of a shunt generator forms an interesting study. If one determines the load magnetization curves at different load currents then the external characteristics can be easily determined. Load magnetization curve is a plot showing the variation of the terminal voltage as a function of the excitation current keeping the speed and armature current constant. If such curves are determined for different load currents then by determining the intersection points of these curves with field resistance line one can get the external characteristics of a shunt generator. Load saturation curve can be generated from no-load saturation curve /OCC by subtracting the armature drop at each excitation point. Thus

it is seen that these family of curves are nothing but OCC shifted downwards by armature drop. Determining their intercepts with the field resistance line gives us the requisite result. Instead of shifting the OCC downwards, the x axis and the field resistance line is shifted 'upwards' corresponding to the drops at the different currents, and their intercepts with OCC are found. These ordinates are then plotted on the original plot. This is shown clearly in Fig. 32. The same procedure can be repeated with different field circuit resistance to yield external characteristics with different values of field resistance. The points of operation up to the maximum current represent a stable region of operation. The second region is unstable. The decrease in the load resistance decreases the terminal voltage in this region.

5.4.1 External characteristics of series generators

In the case of series generators also, the procedure for the determination of the external characteristic is the same. From the occ obtained by running the machine as a separately excited one, the armature drops are deducted to yield external /load characteristics. The armature drop characteristics can be obtained by a short circuit test as before.

Fig. 33 shows the load characteristics of a series generator. The first half of the curve is unstable for constant resistance load. The second half is the region where series generator connected to a constant resistance load could work stably. The load characteristics in the first half however is useful for operating the series generator as a booster. In a booster the current through the machine is decided by the external circuit and the voltage injected into that circuit is decided by the series generator. This is shown in Fig. 35

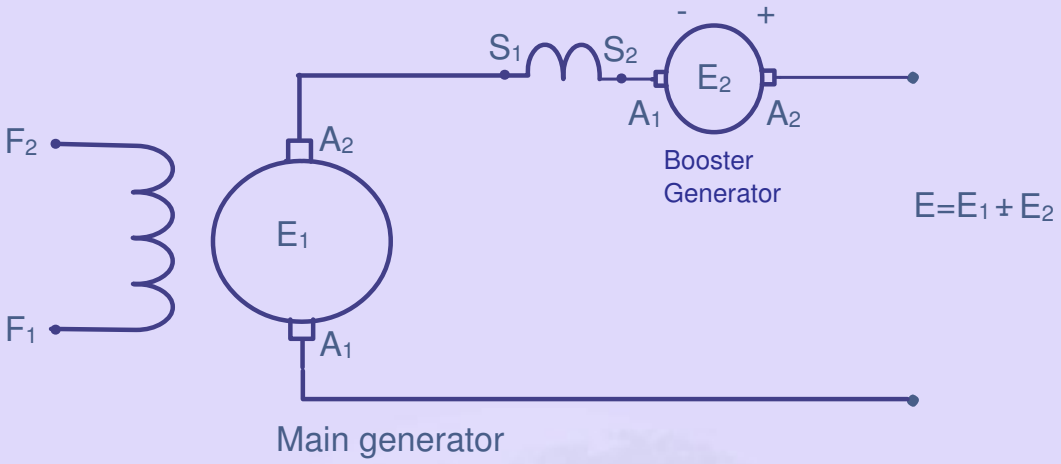

Figure 35: Series generator used as Booster

5.4.2 Load characteristics of compound generators

In the case of compound generators the external characteristics resemble those of shunt generators at low loads. The load current flowing through the series winding aids or opposes the shunt field ampere turns depending upon whether cumulative or differential compounding is used. This increases /decreases the flux per pole and the induced emf E. Thus a load current dependant variation in the characteristic occurs. If this increased emf cancels out the armature drop the terminal voltage remains practically same between no load and full load. This is called as level compounding. Any cumulative compounding below this value is called under compounding and those above are termed over- compounding. These are shown in Fig. 36. The characteristics corresponding to all levels of differential compounding lie below that of a pure shunt machine as the series field mmf opposes that of the shunt field.

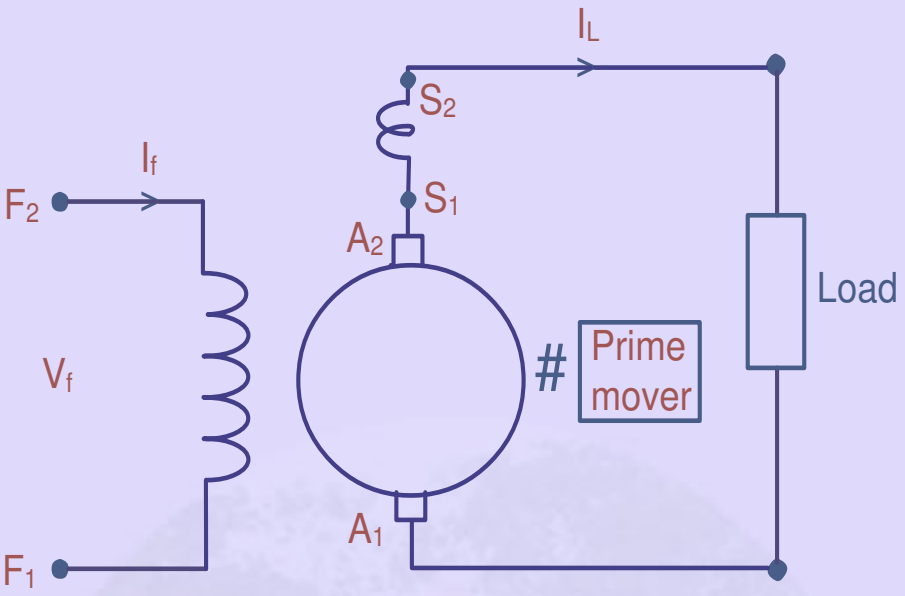

(a)-Connection

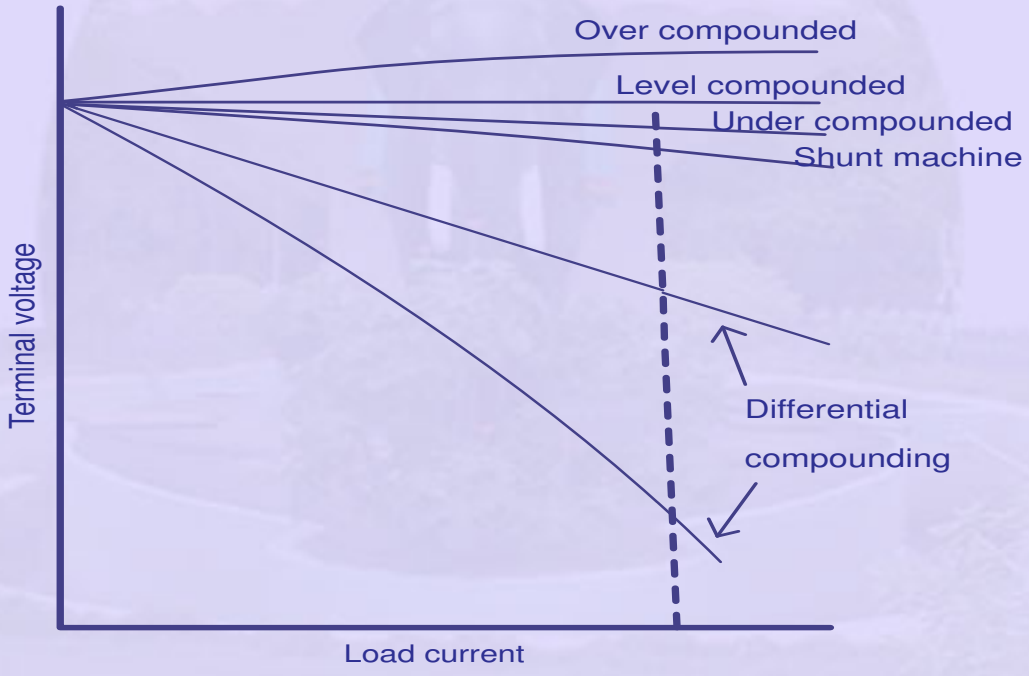

(b)-Characteristics

Figure 36: External characteristic of Compound Generator

External characteristics for other voltages of operation can be similarly derived by changing the speed or the field excitation or both.

5.5 Parallel operation of generators

D.C. generators are required to operate in parallel supplying a common load when the load is larger than the capacity of any one machine. In situations where the load is small but becomes high occasionally, it may be a good idea to press a second machine into operation only as the demand increases. This approach reduces the spare capacity requirement and its cost. In cases where one machine is taken out for repair or maintenance, the other machine can operate with reduced load. In all these cases two or more machines are connected to operate in parallel.

5.5.1 Shunt Generators

Parallel operation of two shunt generators is similar to the operation of two storage batteries in parallel. In the case of generators we can alter the external characteristics easily while it is not possible with batteries. Before connecting the two machines the voltages of the two machines are made equal and opposing inside the loop formed by the two machines. This avoids a circulating current between the machines. The circulating current produces power loss even when the load is not connected. In the case of the loaded machine the difference in the induced emf makes the load sharing unequal.

Fig. 37 shows two generators connected in parallel. The no load emfs are made equal to $E_1 = E_2 = E$ on no load; the current delivered by each machine is zero. As the load is gradually applied a total load current of I ampere is drawn by the load. The load voltage

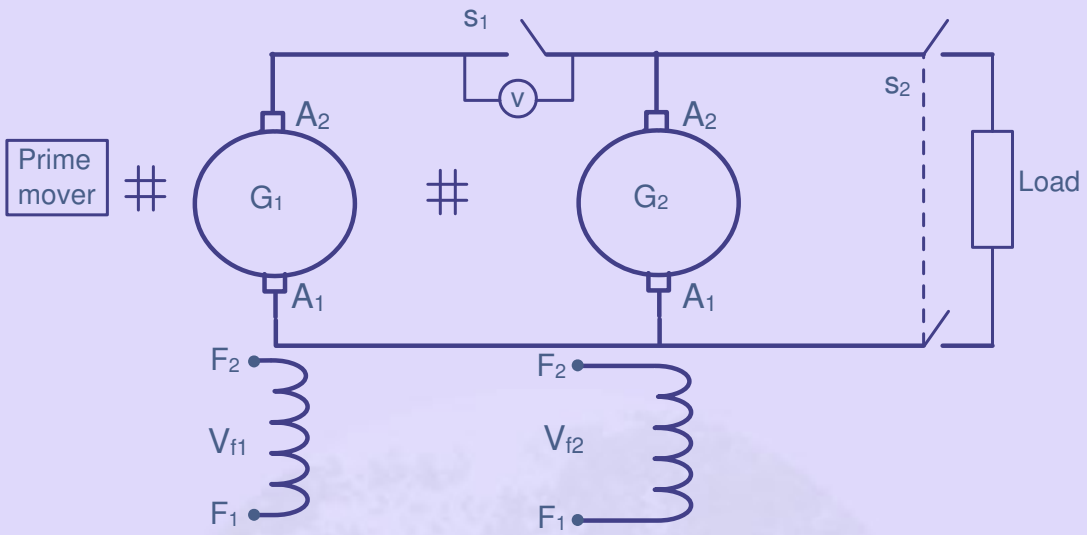

Figure 37: Connection of two shunt generators in Parallel

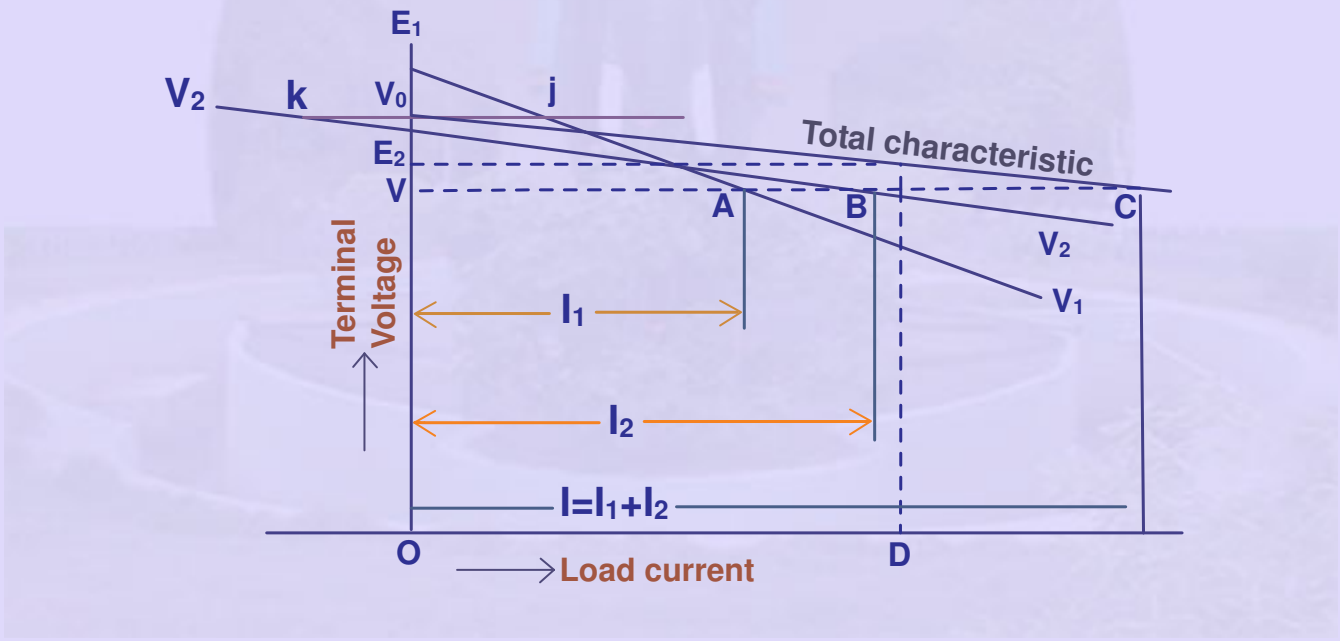

Figure 38: Characteristics of two shunt generators in Parallel

under these conditions is V volt. Each machines will share this total current by delivering currents of I_1 and I_2 ampere such that $I_1 + I_2 = I$.

Also terminal voltage of the two machines must also be V volt. This is dictated by the internal drop in each machine given by equations

$$V = E_1 - I_1 R_{a1} = E_2 - I_2 R_{a2} \tag{37}$$

where R_{a1} and R_{a2} are the armature circuit resistances. If load resistance R_L is known these equations can be solved analytically to determine I_1 and I_2 and hence the manner in which to total output power is shared. If R_L is not known then an iterative procedure has to be adopted. A graphical method can be used with advantage when only the total load current is known and not the value of R_L or V. This is based on the fact that the two machines have a common terminal voltage when connected in parallel. In Fig. 38 the external characteristics of the two machines are first drawn as I and II . For any common voltage the intercepts OA and OB are measured and added and plotted as point at C. Here OC = OA + OB . Thus a third characteristics where terminal voltage is function of the load current is obtained. This can be called as the resultant or total external characteristics of the two machines put together. With this, it is easy to determine the current shared by each machine at any total load current I.

The above procedure can be used even when the two voltages of the machines at no load are different. At no load the total current I is zero ie $I_1 + I_2 = 0$ or $I_1 = -I_2$. Machine I gives out electrical power and machine II receives the same. Looking at the voltage equations, the no load terminal equation V_o becomes

$$V_o = E_1 - I_{1nl} R_{a1} = E_2 + I_{2nl} R_{a2} \tag{38}$$

As can be seen larger the values of R_{a1} and R_{a2} larger is the tolerance for the error between the voltages E_1 and E_2. The converse is also true. When R_{a1} and R_{a2} are nearly zero implying an almost flat external characteristic, the parallel operation is extremely difficult.

5.5.2 Series generators

Series generators are rarely used in industry for supplying loads. Some applications like electric braking may employ them and operate two or more series generates in parallel. Fig. 39 shows two series generators connected in parallel supplying load current of I_1 and I_2. If now due to some disturbance E_1 becomes $E_1 + \Delta E_1$ then the excitation of the machine I increases, increasing the load current delivered. As the total current is I the current supplied by machine II reduces, so also its excitation and induced emf. Thus machine I takes greater and greater fraction of the load current with machine II shedding its load. Ultimately the current of machine II becomes negative and it also loads the first machine. Virtually there is a short circuit of the two sources, the whole process is thus highly unstable. One remedy is for a problem as this is to make the two fields immune to the circulating current between the machines. This is done by connecting an equalizer between the fields as shown in Fig. 39-a . With the equalizer present, a momentary disturbance does not put the two machines out of action. A better solution for such problems is to cross connect the two fields as shown in Fig. 39-b. A tendency to supply a larger current by a machine strengthens the field of the next machine and increases its induced emf . This brings in stable conditions for operation rapidly.

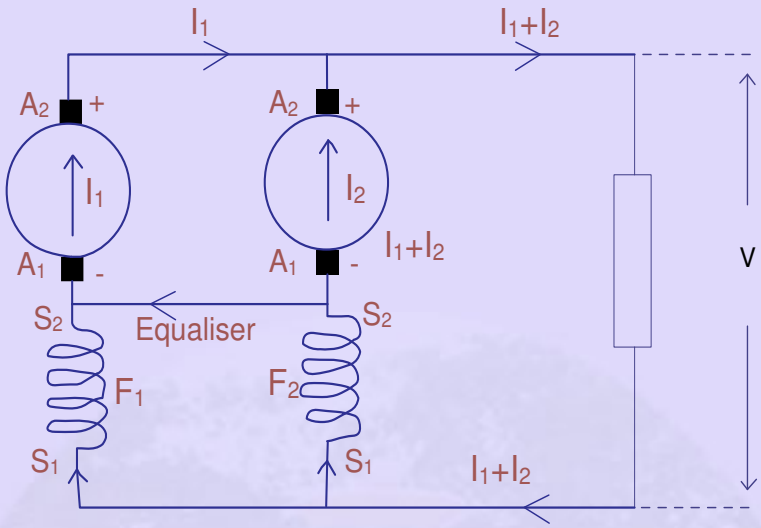

(a)Equalizer connection

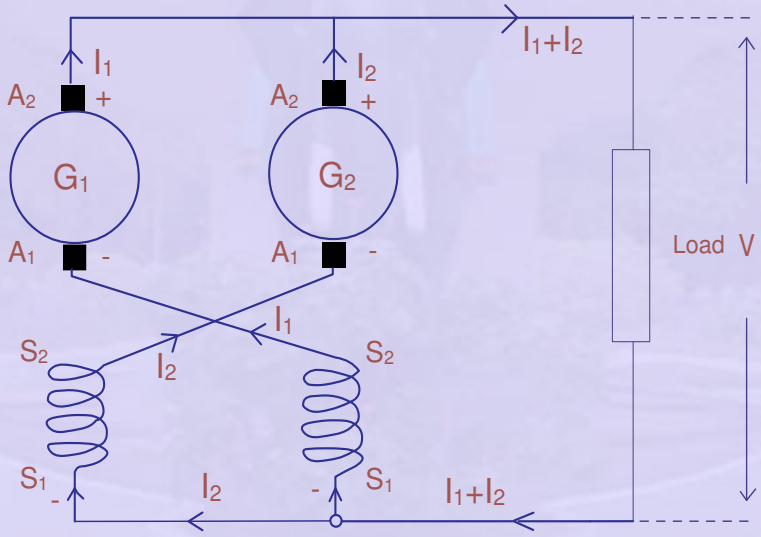

(b)Cross connection of fields

Figure 39: Series Generator working in parallel

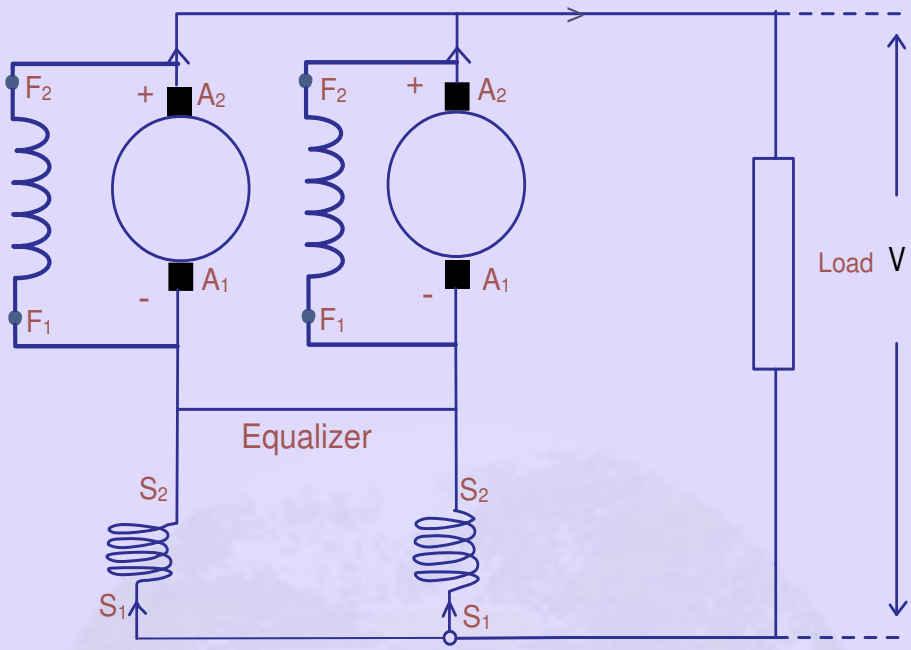

(a)Equalizer connection

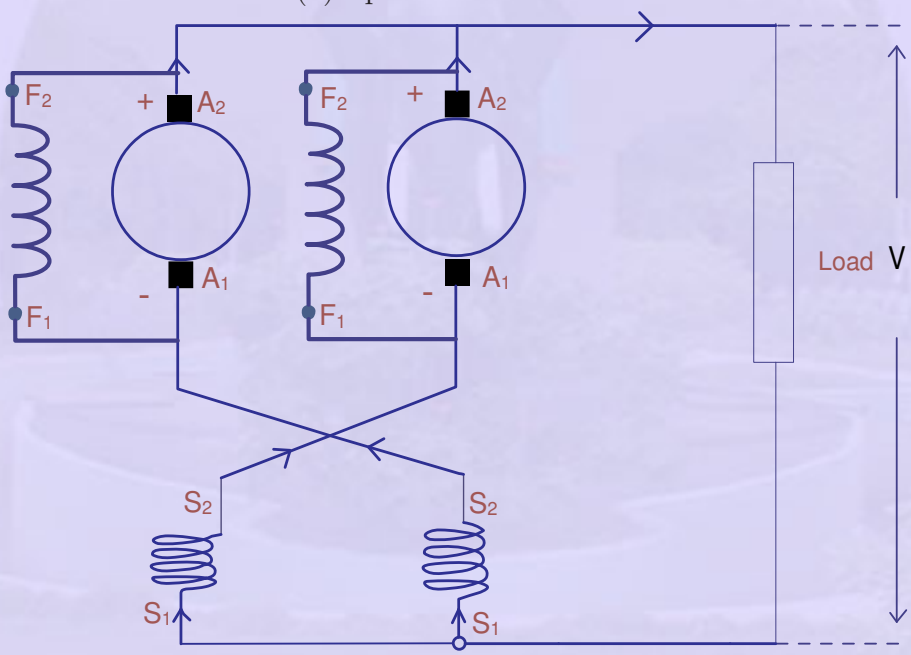

(b)Cross connection of series fields

Figure 40: Compound generators operating in parallel

5.5.3 Compound Generators

The parallel operation of compound machines is similar to shunt generators. Differential compounding would produce a drooping external characteristics and satisfactory parallel operation is made easy. But most of the generators are used in the cumulatively compounded mode. In such cases the external characteristics will be nearly flat making the parallel operation more difficult. By employing equalizer connection for the series windings this problem can be mitigated. Fig. 40 shows the connection diagram for parallel operation of two compound generators.

5.6 D.C. motors

D.C. motors have a place of pride as far as electrical drives are considered. The simplicity, and linearity of the control method makes them highly preferred machines in precision drives. In spite of the great advancements in a.c. drives these machines are still sought after by the industries. Apart from high precision application they are preferred in stand alone systems working on batteries and high speed drives off constant voltage mains. After the field is excited if we pass a current through the armature the rotor experiences a torque and starts rotating. The direction of the torque can be readily obtained from the law of interaction. These moving conductors cut the field and induce emf, usually called the 'back emf' according to Lenz's law and act as a sink of electrical power from the electrical source. This absorbed power appears as mechanical power. The converted mechanical power should overcome the frictional and iron losses before useful work could be done by the same. The connections to the supply of a d.c. shunt motor are given in Fig. 41.

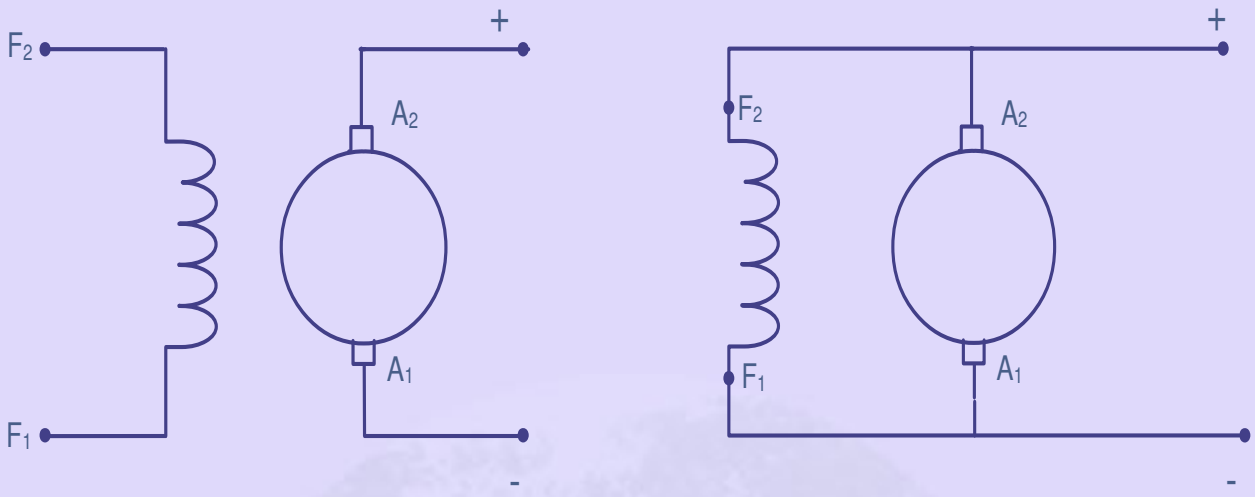

(a)Separate excitation (b) Shunt excitation

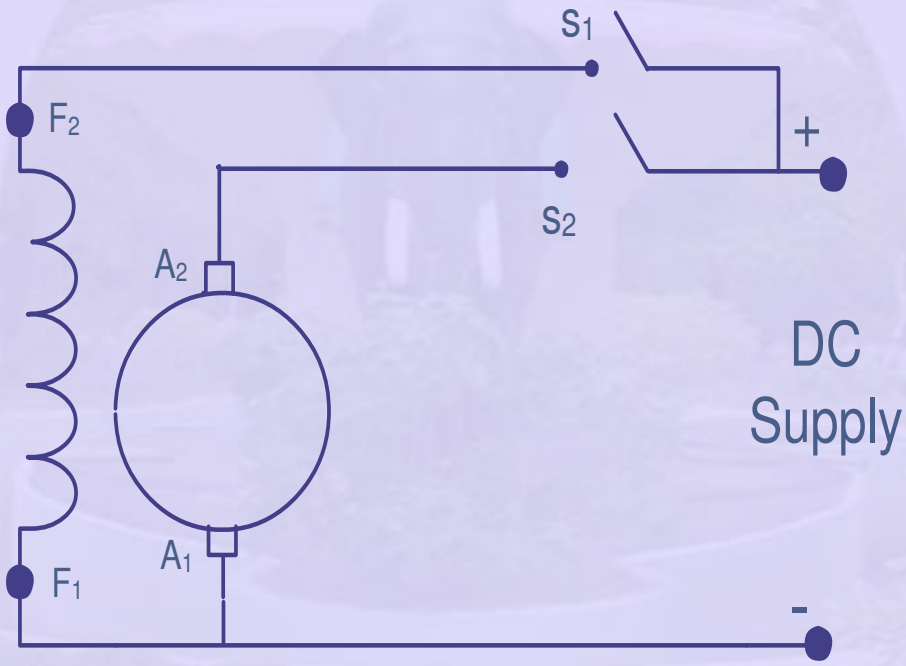

(c)Practical arrangement

Figure 41: Shunt motor connections

Commonly used connection is where in both the field and the armature are energized simultaneously Fig. 41(b). As the field has higher inductance and time constant torque takes some time to reach the full value corresponding to a given armature current. In Fig. 41.(c), the switch S_1 is closed a few seconds prior to switch S_2 . By then the field current would have reached the steady value. So the torque per ampere is high in this case.

The only difference in the second connection Fig. 41.(a) is that the shunt field winding is connected to a separate source. This connection is used when the armature and field voltage are different as is common in high voltage d.c. machines. The field voltage is kept low in such cases for the sake of control purposes. Here again the field circuit must be energized prior to the armature. Suitable interlock should be provided to prevent the armature switch being closed prior to / without closing of field circuit as the armature currents reach very large values still not producing any torque or rotation. The relevant equations for the motoring operation can be written as below

$$V - E - I_a R_a - V_b = 0 \quad \text{or} \quad E = V - I_a R_a - V_b \tag{39}$$

$$E = \frac{p.\phi.Z.n}{b} = K_e \phi.n \quad \text{where} \quad K_e = \frac{pZ}{b} \tag{40}$$

$$T_M = \frac{1}{2\pi}.\frac{p.\phi.ZI_a}{b} = K_t \phi I_a \quad \text{where} \quad K_t = \frac{1}{2\pi}.\frac{pZ}{b} \tag{41}$$

$$\text{and } T_M - T_L = J\frac{dw}{dt} \tag{42}$$

where

T_L- Load torque

T_M- Motor torque

J - polar moment of inertia.

w - angular velocity $= 2\pi.n$

The first one is an electrical equation, the second and the third are electro mechanical in nature and the last equation is the mechanical equation of motion. K_e and K_t are normally termed as back emf constant and torque constant respectively. Under steady speed of operation the fourth equation is not required. Using these equations one can determine the torque speed characteristics of the machine for a given applied voltage. These characteristics are similar to the external characteristics for a generator. Here the torque on the machine is assumed to be varying and the corresponding speed of operation is determined. This is termed as the torque speed characteristic of the motor.

5.7 Torque speed characteristics of a shunt motor

A constant applied voltage V is assumed across the armature. As the armature current I_a, varies the armature drop varies proportionally and one can plot the variation of the induced emf E. The mmf of the field is assumed to be constant. The flux inside the machine however slightly falls due to the effect of saturation and due to armature reaction. The variation of these parameters are shown in Fig. 42.

Knowing the value of E and flux one can determine the value of the speed. Also knowing the armature current and the flux, the value of the torque is found out. This procedure is repeated for different values of the assumed armature currents and the values are plotted as in Fig. 42-(a). From these graphs, a graph indicating speed as a function of torque or the torque-speed characteristics is plotted Fig. 42-(b)(i).

As seen from the figure the fall in the flux due to load increases the speed due to the fact that the induced emf depends on the product of speed and flux. Thus the speed

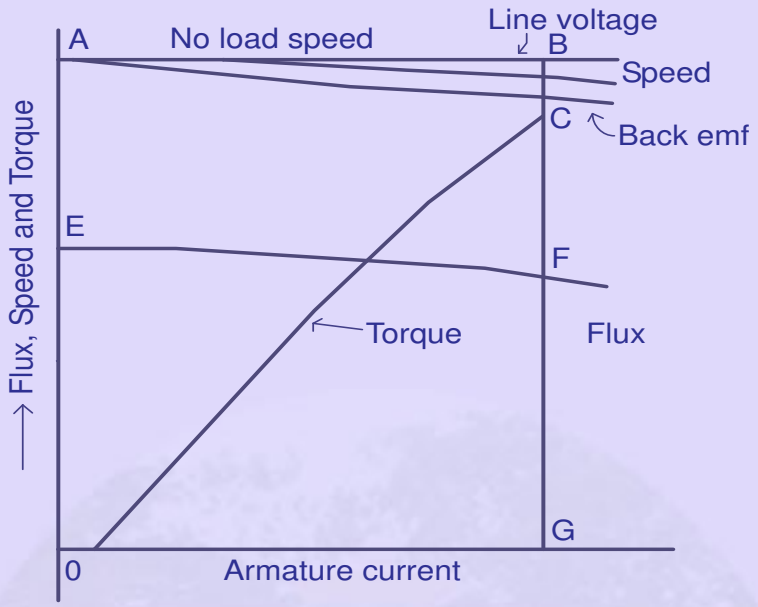

(a)Load characteristics

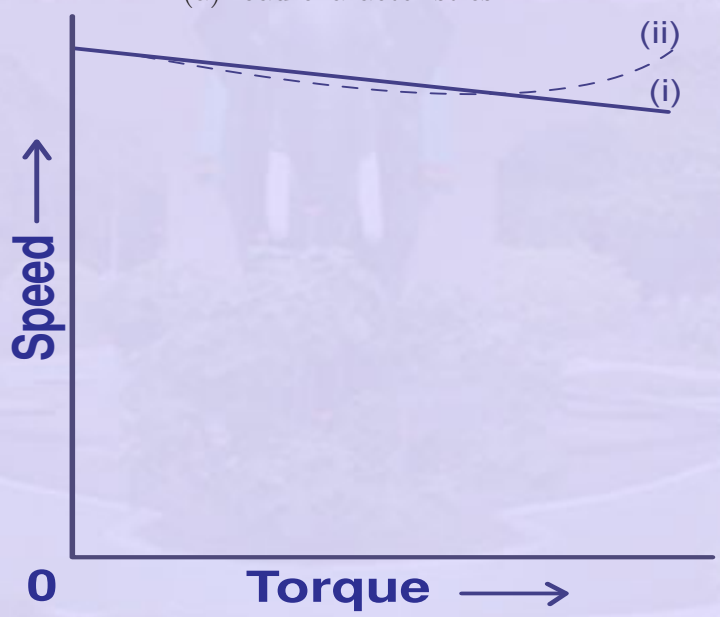

(b)Torque speed curve

Figure 42: DC Shunt motor characteristics

of the machine remains more or less constant with load. With highly saturated machines the on-load speed may even slightly increase at over load conditions. This effects gets more pronounced if the machine is designed to have its normal field ampere turns much less than the armature ampere turns. This type of external characteristics introduces instability during operation Fig. 42(b)(ii) and hence must be avoided. This may be simply achieved by providing a series stability winding which aids the shunt field mmf.

5.8 Load characteristics of a series motor

Following the procedure described earlier under shunt motor, the torque speed characteristics of a series motor can also be determined. The armature current also happens to be the excitation current of the series field and hence the flux variation resembles the magnetization curve of the machine. At large value of the armature currents the useful flux would be less than the no-load magnetization curve for the machine. Similarly for small values of the load currents the torque varies as a square of the armature currents as the flux is proportional to armature current in this region. As the magnetic circuit becomes more and more saturated the torque becomes proportional to I_a as flux variation becomes small. Fig. 43(a) shows the variation of E_1, flux , torque and speed following the above procedure from which the torque-speed characteristics of the series motor for a given applied voltage V can be plotted as shown in Fig. 43.(b) The initial portion of this torque-speed curve is seen to be a rectangular hyperbola and the final portion is nearly a straight line. The speed under light load conditions is many times more than the rated speed of the motor. Such high speeds are unsafe, as the centrifugal forces acting on the armature and commutator can destroy them giving rise to a catastrophic break down. Hence series motors are not recommended for use where there is a possibility of the load becoming zero. In order to

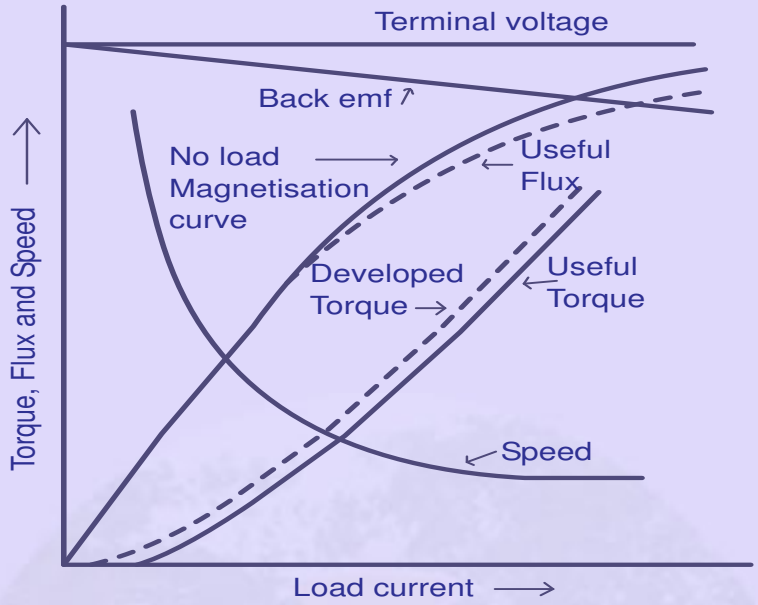

(a)Load characteristics

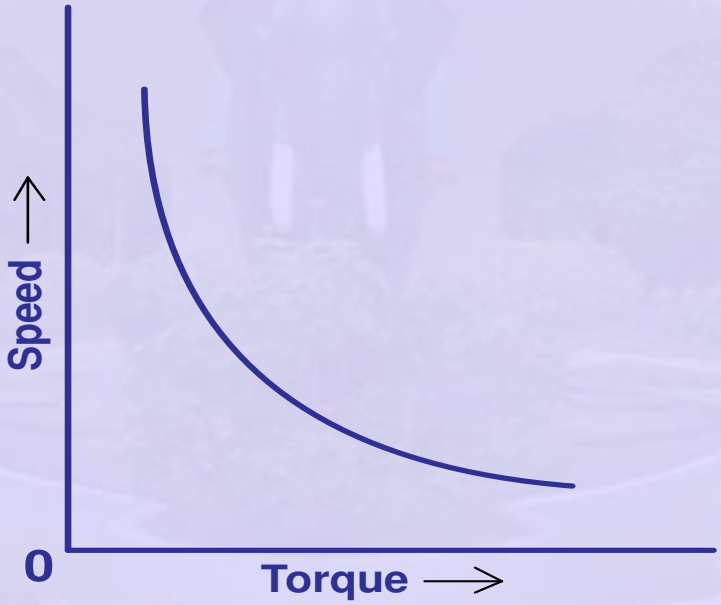

(b)-Torque speed curve

Figure 43: Load characteristics of a Series Motor

safeguard the motor and personnel, in the modern machines, a 'weak' shunt field is provided on series motors to ensure a definite, though small, value of flux even when the armature current is nearly zero. This way the no-load speed is limited to a safe maximum speed. It is needless to say, this field should be connected so as to aid the series field.

5.9 Load characteristics of a compound motor

Two situations arise in the case of compound motors. The mmf of the shunt field and series field may oppose each other or they may aid each other. The first configuration is called differential compounding and is rarely used. They lead to unstable operation of the machine unless the armature mmf is small and there is no magnetic saturation. This mode may sometimes result due to the motoring operation of a level-compounded generator, say by the failure of the prime mover. Also, differential compounding may result in large negative mmf under overload/starting condition and the machine may start in the reverse direction. In motors intended for constant speed operation the level of compounding is very low as not to cause any problem.

Cumulatively compounded motors are very widely used for industrial drives. High degree of compounding will make the machine approach a series machine like characteristics but with a safe no-load speed. The major benefit of the compounding is that the field is strengthened on load. Thus the torque per ampere of the armature current is made high. This feature makes a cumulatively compounded machine well suited for intermittent peak loads. Due to the large speed variation between light load and peak load conditions, a fly wheel can be used with such motors with advantage. Due to the reasons provided under shunt and series motors for the provision of an additional series/shunt winding, it can be

seen that all modern machines are compound machines. The difference between them is only in the level of compounding.