Module-03 : Building blocks of PINCH Technology

Lecture-04: **Data Extraction**

Key words: Data Extraction, Targeting, HEN,

Anchoring on thermodynamic principles, Pinch Technology offers a systematic analysis to optimum energy integration in a process. The observed improvements in the process offered by this technique are not due to the involvement of any advanced unit operations, but due the excellent heat integration scheme it offers. The key advantages of pinch technology over conventional design methods are its ability to set an *energy target* before the commencement of the design. The energy target offers the minimum theoretical energy required for the process under consideration. Pinch Technology provides the thermodynamic rules to ensure that the energy targets are achieved during the heat exchanger network design.

The main strategy of Pinch Technology is to match cold and hot process streams with the help of a Heat Exchangers Network (HEN) so that requirements for externally supplied utilities are reduced. The best design for an energy-efficient HEN results in a tradeoff between the energy recovered and the capital costs involved for energy recovery.

Fig.3.1 shows the systematic approach required to be taken for process design using Pinch Technology.

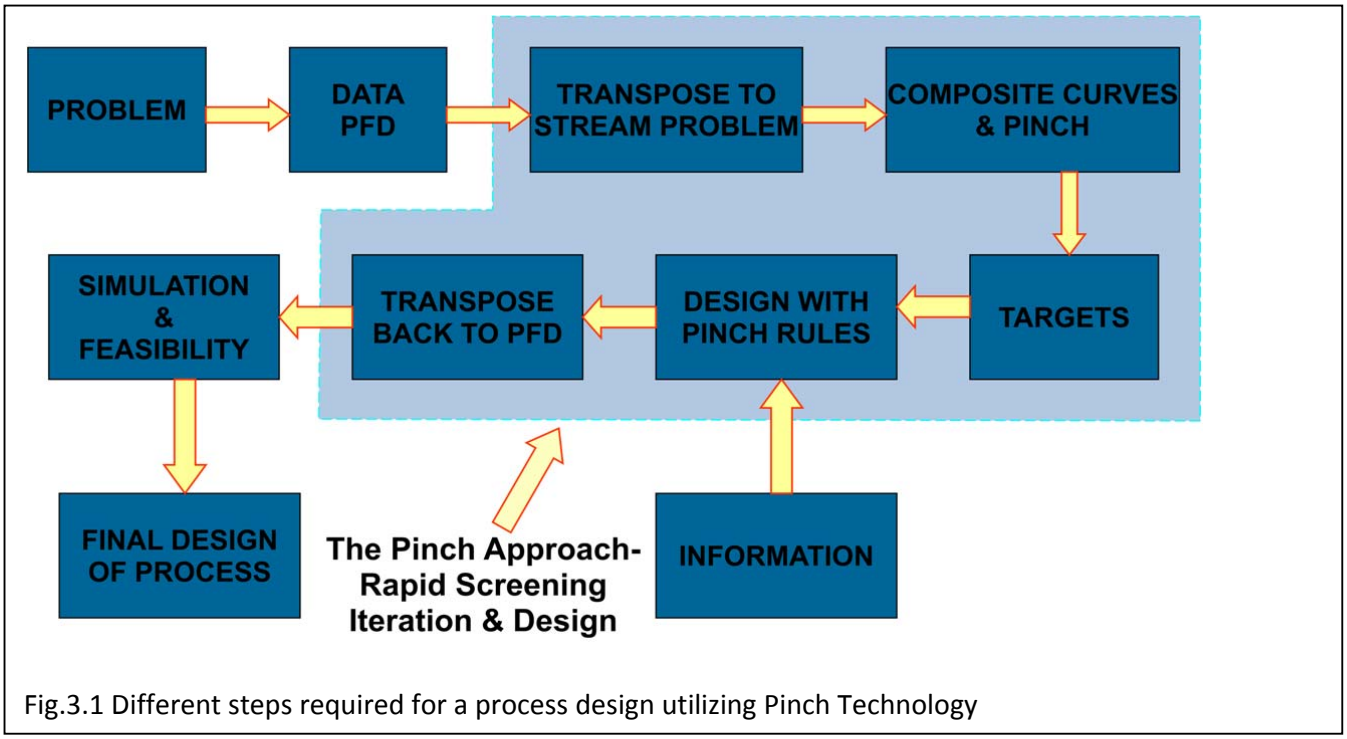

Fig.3.1 Different steps required for a process design utilizing Pinch Technology

3.1 KEY STEPS OF PINCH TECHNOLOGY

There are four key steps of pinch analysis in the design of heat recovery systems for both new and existing processes:

1) Data Extraction, which involves collecting data for the process and the utility system.

2) Targeting, which establishes targets for design in terms of energy, number of units, area, etc. for best performance

3) Design, where an initial Heat Exchanger Network is established.

4) Optimization, where the initial design is simplified and improved economically.

3.2 Data Extraction

The amount of information available form plant measurement, data acquisition systems, DCS, and simulation models of a process can be very large, and most of this data may not be of relevance to the Pinch analysis. It is thus necessary to identify and extract only the information that truly captures the relevant sources(Hot streams) and sinks (Cold streams) and their interactions with the overall process.

The starting point for a Pinch Technology analysis is to recognize in the process of interest all the process streams that need to be heated and all those that need to be cooled. This necessitates identifying the streams, their flow rates and thermal properties, phase changes, and the temperature ranges through which these must be heated or cooled. This can be performed after mass balances have been completed and temperatures and pressures have been established for the process streams. Energy quantities can be computed by thermodynamic calculations. The above information are generally available in process flow diagrams (PFD). Some heat duties may not be included in the network analysis as these are handled independently without integration. For example, distillation column reboiler heating and condenser cooling may be treated independently of the rest of the heat duties. All the process streams that are to be heated, their temperatures, and enthalpy change rates corresponding to their respective temperature changes or phase changes are then tabulated.

Having obtained a reliable heat and mass balance, the next stage is to extract the hot and cold streams in the form required for pinch analysis. Data extraction can be the most time consuming task of a pinch analysis. It is essential that all the heating, cooling, and phase changes in the process be identified. In existing processes, accurate information may not be

readily available, and the engineer may have to go into the field to obtain it. Modeling tools, such as simulation and data reconciliation, can be very helpful in collecting a set of consistent and reliable data.

As mentioned earlier, the key information that needs to be extracted includes the temperature levels of the process streams, and the amount of heat required to bring about desired temperature changes. The enthalpy change rate for *each* stream is obtained from:

$$\Delta H = mCp\,\Delta T = CP\Delta T$$

Where, ΔH is the enthalpy change rate, m the mass flow rate, Cp the heat capacity, ΔT the temperature change in the stream, and CP the heat capacity flowrate defined as the mCp product. Heat capacity and flowrate are key pieces of information for defining the enthalpy change for a given process stream.

In summary the data required for each process stream include:

- Mass flowrate (kg/s)
- Specific heat capacity (kJ/kg °C)
- Supply and target temperatures (°C), and
- Heat of vaporization for streams with a phase change (kJ/kg).

Additionally, the following information must be collected on utilities and existing heat exchangers

- Existing heat exchanger area (m^2)
- Heat transfer coefficient for cold and hot sides of heat exchangers (kW / m^2 °C).
- Utilities available in the process (water temperature, steam pressure levels, etc
- Marginal utility costs, as opposed to average utility costs.

Data extraction must be preformed carefully as the results of Pinch Analysis strongly depend on this step. A key objective of data extraction is to recognize which parts of the flowsheet are subject to change during the analysis (e.g. possibility of making modifications to the piping, or adding new heat exchangers, possibility of making temperature changes in the process or modifying the utility that heats a given piece of equipment (MP steam instead of HP steam for example), etc). This must be done carefully, as poor data extraction can easily lead to missed opportunities for improved process design. In extreme cases, poor data extraction can falsely present the existing process flow-sheet as optimal in terms of energy efficiency. If, during extraction, all features of the flowsheet are considered to be fixed, there will clearly be no scope for improvement. In other extreme case, if it does not accept any features of the existing flow-sheet then pinch analysis may over-estimate the potential benefits.

At the beginning of a project it is recommended that all process streams be included in the data extraction. Constraints regarding issues such as distance between operations, operability, control and safety concerns can be incorporated later on. By proceeding in such a fashion, it is

possible to have an objective evaluation of the costs of imposing such constraints. A lot of experience is required to ensure that potentially interesting heat-recovery projects are not excluded. Data extraction is a complex issue, and needs expertise.

There are a lot of sector specifics for data extraction. However, heuristic rules have been developed as guidelines. The following are the most relevant:

- Do not mix streams at different temperatures. Direct non-isothermal mixing acts as a heat exchanger. Such mixing may involve cross-pinch heat transfer, and should not become a fixed feature of the design. For example, if the pinch is located at 80°C(hot pinch) and 70°C (cold pinch), mixing a stream at 95°C with a stream at 60°C creates a cross pinch(Fig.3.2(b)), and will increase the energy targets. The way to extract these streams is to consider them independently, i.e., one stream with a supply temperature of 60°C and the required target temperature, and the other stream with a supply temperature of 95°C. If for process reasons both streams need mixing then these streams should be brought to same temperature say 85 °C before mixing(Fig.3.2 (c) & (d)).

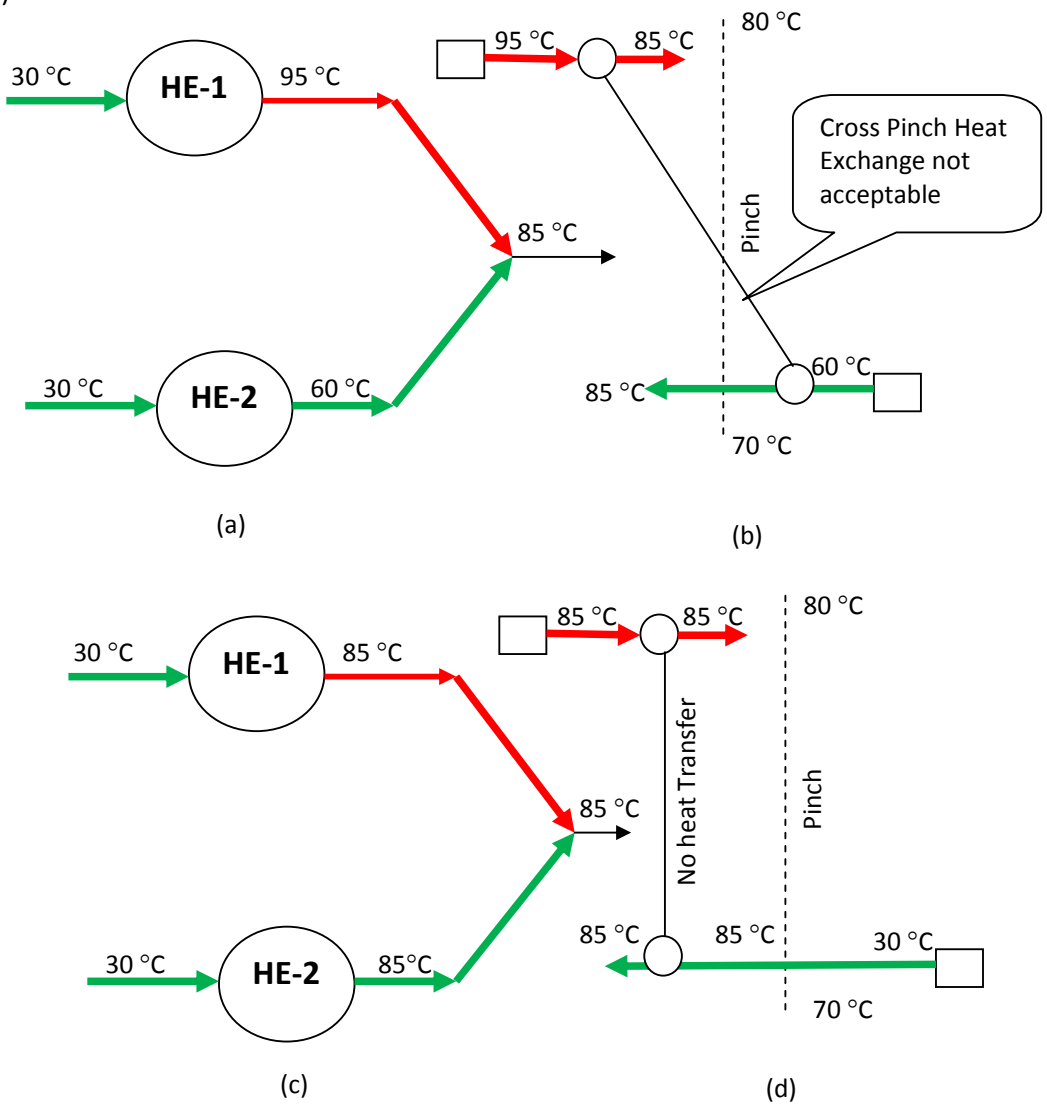

Fig. 3.2 Non isothermal mixing of streams act as a heat exchanger[2]

- For data extraction, the *effective* stream temperatures are more important than the *actual* stream temperatures. For example, for a hot stream it is important that at what temperature it is available to exchange heat against cold streams, rather than its actual temperature. Similarly, for cold streams it is the temperature at which heat must be supplied to them is important.
- As CP is a function of temperature, the enthalpy change of some streams is considerably non-linear. The relationship between CP and ΔH with T is given below:

Heat capacity flowrate $CP = c_0 + c_1T + c_2T^2 + c_3T^3 \ldots$
Heat load $\Delta H = c_0T + (c_1T^2/2) + (c_2T^3/3) + (c_3T^4/4) \ldots$

This is particularly true for phase changing streams such as condensing/vaporising streams. In such a situation, sticking to just one value of CP might lead to inaccurate results. It is more accurate to report the stream in as many "segments" as is required to closely mimic the heating and cooling curve of the stream. However, the position of the extracted stream related to the actual stream curve is also important. In Figure 3.3(a), the extracted stream (straight line) is colder than the actual stream near the high temperature end and thus shows false lower temperature. If there is a cold stream with temperature more than the extracted stream but not high enough for the actual stream, an infeasible match will result. Figure 3.3(b) features highly safe side approximation because the actual cold stream is colder than each of the three extracted segments. The Fig.3.3(c) shows more realistic linearization on the safe side and meets the following rules:

I. The actual hot stream must be hotter than the extracted hot stream
II. The actual cold stream must be colder than the extracted cold stream

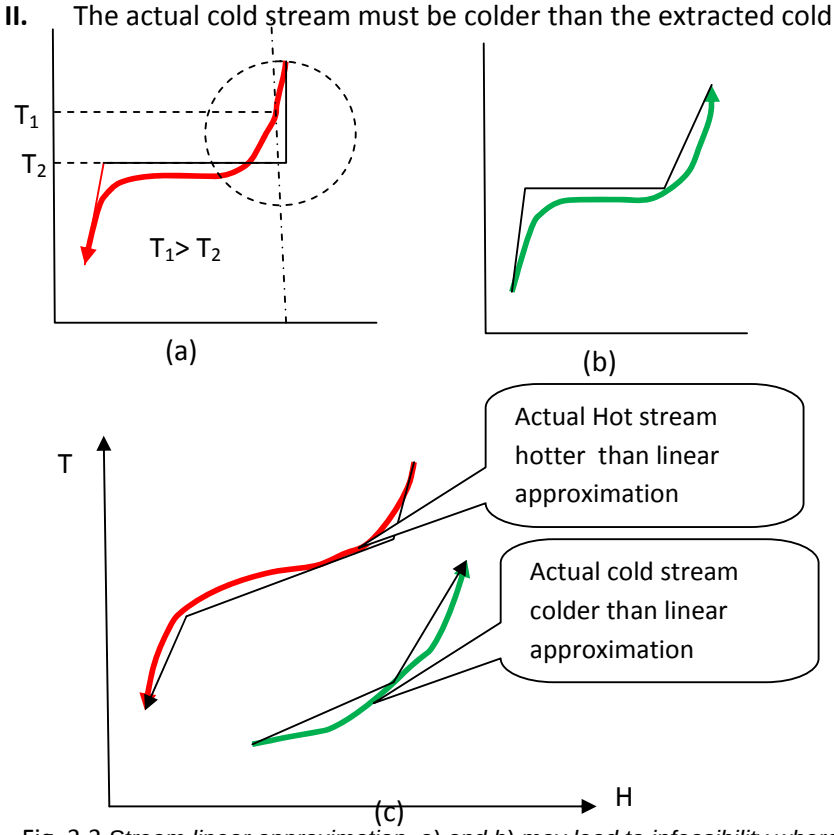

Fig. 3.3 *Stream linear approximation, a) and b) may lead to infeasibility where(c) is safe side linear approximation[2]*

- Do not include utility streams (steam, cooling water, refrigerant, cooling air, etc.) that can in principle be replaced by any other stream(process or utility) in the process data unless these are involved directly in the process or these cannot be replaced. An example of a utility is cooling water used in an heat exchanger. Since the cooling water can be replaced by air cooling, refrigerant cooling or process stream heating, this should not be extracted. Further, when steam is used in a shift reactor to enhance the shift process, it is not a utility in true sense as it is used as a reactant and cannot be substituted by other stream. Another example that is not so straightforward is when direct steam is used in the reboiler of a distillation column to heat. If it is used just for heating purposes and can be replaced by any other hot utility such as hot oil, steam of different pressure or some other hot utility such as DOWTHERM, it would be treated as a utility and should not be extracted. However, if the reboiling is through direct injection of steam, then the steam is not a utility and should be extracted as part of the process. As one of the aims of using Pinch analysis is to reduce the usage of utilities. Therefore, if utility streams are extracted in a similar way that of process streams, these will be considered as fixed requirements and no opportunities for reduction in utility use will be achieved. In some cases, utility streams can be included because it is not practical to replace them by any form of heat recovery. For example, this is often the case for steam dryers, ejectors and turbine drives.
- Do not consider the existing plant layout. When selecting the inlet and outlet parameters for a process stream, existing heat exchange equipment and plant topology should not be taken into account at first. True utility targets (for cooling and heating) should be set regardless of the existing plant layout. Current plant energy consumption can then be compared with minimum energy targets. In retrofit of existing facilities, once these targets have been determined, plant layout (existing heat exchangers and piping, distances, etc) needs to be taken into account in order to identify practical and cost-effective ways to approach these targets**.**
- The temperature, pressure and enthalpy conditions of some streams within a process are open to change within certain limits. Such stream data are termed as “soft” data. Soft data should ideally be extracted such that the overall process energy requirement is minimized. For this, the (+)/(-) principle of Pinch Analysis for process modifications is applied. Thus one should identify hard and soft constraints on temperature, pressure and enthalpy levels. For example, a hard constraint would be the inlet temperature of a reactor that cannot be changed in any way, while a soft constraint would be the discharged temperature of a product going to a storage, for which the target temperature is often flexible as the temperature of the stream going into a storage can be within a substantial temperature range.

  An example of soft data extraction is shown below[2]:

It is helpful to view the preliminary set of composite curves before to decide upon how best to extract the “soft data” as shown in Figure 3.4. Figure 3.4(b) depicts a product stream

leaving the process boundary at temperature T_1 for product storage. Fig. 3.4(a) shows the preliminary composite curves for the overall process. T_1 being greater than the pinch temperature (T_{pinch}), useful heat can still be extracted from the stream up to T_{pinch}. This will further reduce the hot utility requirement based on the (+)/(-) principle. The appropriate data extraction, therefore, in this case is pinch temperature.

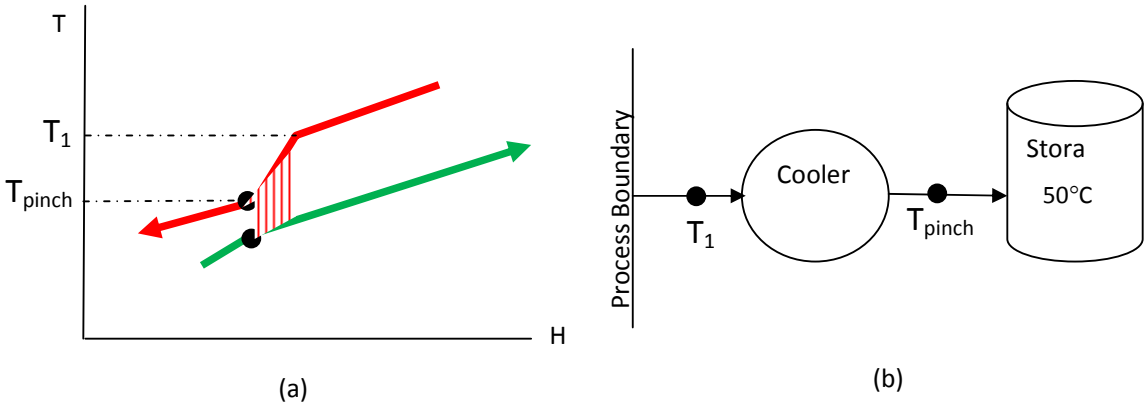

Fig.3.4 (a) & (b) Extraction of soft stream data

- While extracting data, latent heat loads need some care. Theoretically, these can be considered to be streams with a finite heat load at a fixed temperature, for such streams the heat capacity flowrate *CP (CP =ΔH/ΔT and ΔT=0)* is infinite. In practice, some targeting softwares cannot handle this and the target temperature has to be set slightly different to the supply temperature – say by 0.1°C. In such cases, keep the supply temperature at its original value and alter the target temperature – upwards for a cold (vaporising) stream, downwards for a hot (condensing) stream. The reason is that the pinch is always caused by a stream beginning, so this will ensure that the pinch temperature is still exactly correct.
- Effective temperatures: While extracting stream data from a PFD for hot and cold streams care must be taken to present the available heat at its effective temperature. Let us consider a part of the process to explain it.

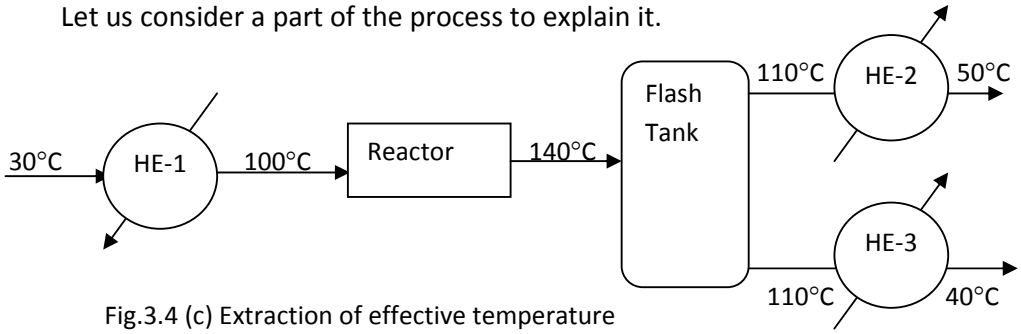

Fig.3.4 (c) Extraction of effective temperature

The output of the reactor at 140°C enters the flash tank and cools down to 110°C. The vapour and liquid leaving the flash tank is 110°C and are cooled down to 50°C and 40°C

respectively. Even though the reactor out put is at 140°C it is not available for exchange of heat . This heat is only available at 110°C. Thus during data extraction only one cold stream and two hot streams are considered Cold-1 (30°C to 100°C), Hot-2(110°C to 50°C) and Hot -3 (110°C to 40°C).

- Streams that undergo phase-changesand hence have irregular temperature-enthalpy curves can be handled by the addition of extra temperature intervals as indicated by Su [4]
- Hot streams are defined as those streams which require cooling and in this process transfers heat to cold streams. In general, during this process the temperature of the stream drops. However, the above argument is not valid for the condensing steam which is also a hot stream as it transfers heat to a cold stream.
- Cold streams are those streams which require heating and during this process gains heat. In general, during the above process, its temperature increases. However, the temperature may not increase in some cases when a stream takes heat. For example boiling of a liquid. If the liquid is evaporating due to boiling it is also a cold stream**.**

3.3 Examples of Data Extraction

Example-3.1

The complete flow sheet of a process is given below in Fig. 3.5 and the literal data extracted for stream data table is given in Table 3.1.

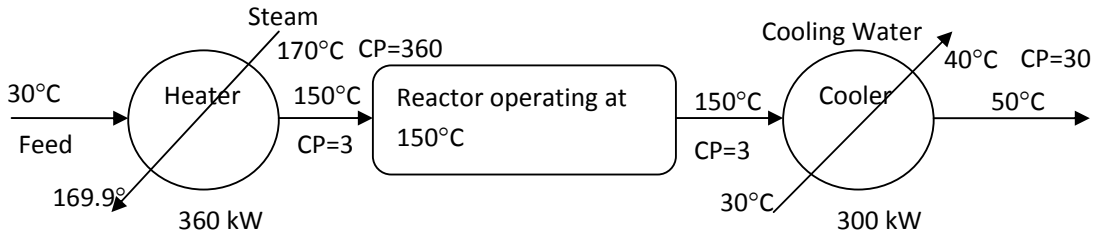

Fig 3.5 Process flow sheet of a given process

Table 3.1: Stream table data for Fig. 5

Name of the stream	Supply Temperature Ts, °C	Target Temperature Tt, °C	CP kW/°C	ΔH kW
Hot-1	150	50	3	-300
Hot-2	170	169.9	3600	-360
Cold-1	30	150	3	360
Cold-2	30	40	30	300

Minus sign attached with ΔH shows heat given by a stream and plus sing shows heat received by a given stream. It appears from the table No.3.1 that the whole system is in thermal

equilibrium and thus energy conservation is not possible. Whereas, from the Fig.3.6 it is clear that internal heat exchange is possible up to the extent of 300 kW and cold utility can be eliminated.

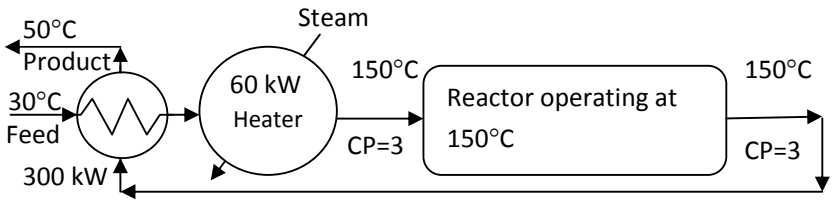

Fig 3.6 Process flow sheet indicating internal heat

This has happened because we have not followed the rules of data extraction which tells "Do not include utility streams (steam, cooling water, refrigerant, cooling air, etc.) that can in principle be replaced by any other stream(process or utility) in the process data unless these are involved directly in the process or these cannot be replaced." Further it tells that "Therefore, if utility streams are extracted in a similar way that of process streams, these will be considered as fixed requirements and no opportunities for reduction in utility use will be achieved.". Hence, utility streams should not be extracted in general.

The proper way of extracting data is shown in Table 2.

Table 3.2: Correct extracted data for Fig.3.5

Name of the stream	Supply Temperature Ts, °C	Target Temperature Tt, °C	CP kW/°C	ΔH, kW
Hot-1	150	50	3	-300
Cold-1	30	150	3	360

Example -3.2

The process flow diagram is shown in Fig.3.7 and the extracted stream data is shown in Table 3.

Table 3.3 Stream data for problem shown in Fig.3.7

Name of the stream	Supply Temperature Ts, °C	Target Temperature Tt, °C	CP kW/°C
Hot-1	150	30	1.5
Hot-2	170	60	3.0
Cold-1	80	140	4.0
Cold-2	20	135	2.0

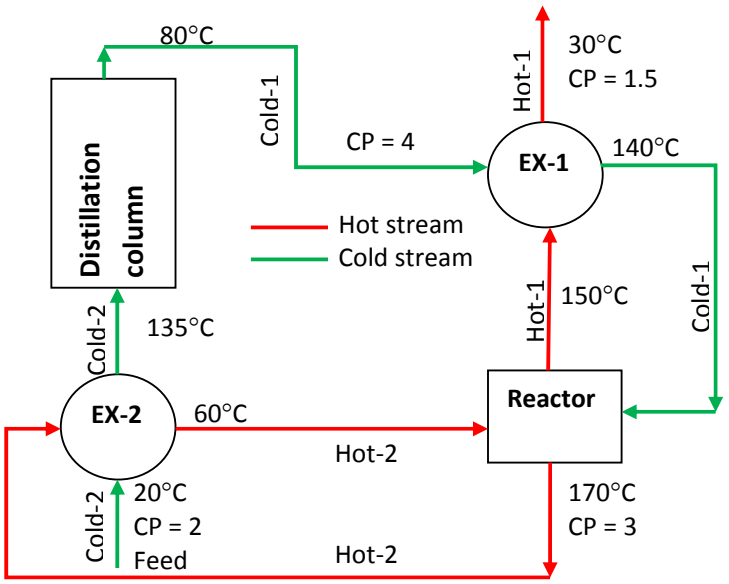

Fig.3.7 Process flow sheet of a process having distillation column, reactor and heat exchangers

References

1. N. Hallale, *Chem. Eng. Prog.,* **97**(7): 30 (2001).
2. Linnhoff March, "Introduction to Pinch Technology" Targeting House, Gadbrook Park, Northwich, Cheshire, CW9 7UZ, England
3. Chemical Process Design and Integration, Robin Smith, John Wiley & Sons Ltd.
4. Su J.L.,"A Loop breaking evolutionary method for the synthesis of heat exchanger networks", M.S. Thesis, Washington Univ. (1979)